# SAC-8P-M12MS/ 2,0-28X/M12FS OD - Sensor/actuator cable

1407277

https://www.phoenixcontact.com/us/products/1407277

Please be informed that the data shown in this PDF document is generated from our online catalog. Please find the complete data in the user documentation. Our general terms of use for downloads are valid.



Sensor/actuator cable, 8-position, PE-X halogen-free, black-gray RAL 7021, Plug straight M12, coding: A, on Socket straight M12, coding: A, cable length: 2 m, for outdoor applications, with high-grade steel knurl

## Your advantages

- Easy and safe: 100 % electrically tested plug-in components
- Robust throughout: resistant to oil, UV, and ozone, withstands temperatures from -40°C … +105°C

## Commercial data

| | |
|---|---|
| Item number | 1407277 |
| Packing unit | 1 pc |
| Minimum order quantity | 1 pc |
| Note | Made to order (non-returnable) |
| Sales key | BF03 |
| Product key | AF1CFA |
| GTIN | 4046356773959 |
| Weight per piece (including packing) | 147.8 g |
| Weight per piece (excluding packing) | 147.8 g |
| Customs tariff number | 85444290 |
| Country of origin | PL |

## Technical data

### Product properties

| | |
|---|---|
| Product type | Sensor/actuator cable |
| Application | External areas |
| Number of positions | 8 |
| No. of cable outlets | 1 |
| Shielded | no |
| Coding | A |

Insulation characteristics

| | |
|---|---|
| Degree of pollution | 3 |

### Material specifications

| | |
|---|---|
| Flammability rating according to UL 94 | V0 |
| Seal material | FPM |
| Material of grip body | PP |
| Contact material | CuSn |
| Contact surface material | Ni/Au |
| Contact carrier material | PP |
| Material for screw connection | Stainless steel |

### Electrical properties

| | |
|---|---|
| Insulation resistance | ≥ 100 MΩ |
| Nominal voltage $U_N$ | 30 V AC |
| | 30 V DC |
| Nominal current $I_N$ | 2 A |

### Mechanical properties

Mechanical data

| | |
|---|---|
| Insertion/withdrawal cycles | ≥ 100 |

### Signaling

| | |
|---|---|
| Status display | no |
| Status display present | no |

### Connection data

Conductor connection

| | |
|---|---|
| Tightening torque | 0.4 Nm (M12 connector) |

### Connector

Connection 1

| | |
|---|---|
| Type | Plug straight M12 |

| | |
|---|---|
| Number of positions | 8 |
| Coding type | A |

Connection 2

| | |
|---|---|
| Type | Socket straight M12 |
| Number of positions | 8 |
| Coding type | A |

## Cable/line

| | |
|---|---|
| Cable length | 2 m |

PE-X black [28X]

| | |
|---|---|
| Dimensional drawing |  |
| Cable weight | 65 kg/km |
| Number of positions | 8 |
| Shielded | no |
| Cable type | PE-X black [28X] |
| Conductor structure signal line | 32x 0.10 mm |
| AWG signal line | 24 |
| Conductor cross-section | 8x 0.25 mm² |
| Wire diameter incl. insulation | 1.17 mm ±0.02 mm |
| External cable diameter | 6.80 mm ±0.2 mm |
| Outer sheath, material | PE-X |
| External sheath, color | black-gray RAL 7021 |
| Conductor material | Bare Cu litz wires |
| Material, filler | PP yarn |
| Material wire insulation | PE-X |
| Single wire, color | white, brown, green, yellow, gray, pink, blue, red |
| Thickness, insulation | approx. 0.25 mm (Core insulation) |
| Thickness, outer sheath | approx. 1.30 mm |
| Overall twist | 8 wires around filler to the core |
| Length of twist, overall twist | 67 mm |
| Max. conductor resistance | ≤ 78 Ω/km (at 20 °C) |
| Insulation resistance | ≥ 100 MΩ*km (at 20 °C) |
| Nominal voltage, cable | ≤ 300 V AC |
| Test voltage | ≥ 3000 V AC (Spark test) |
| Minimum bending radius, fixed installation | 5 x D |
| Minimum bending radius, flexible installation | 10 x D |

| | |
|---|---|
| Smallest bending radius, fixed installation | 34 mm |
| Smallest bending radius, movable installation | 68 mm |
| Dynamic load capacity (bending) | Max. bending cycles: 2000000, Bending radius: 10 x D, Traversing path: 10 m, Traversing rate: 3 m/s, Acceleration: 10 m/s² |
| Halogen-free | in accordance with DIN VDE 0472 part 815 |
| | in accordance with DIN EN 50267-2-1 |
| Flame resistance | According to DIN EN 60332-1-2 |
| | according to DIN EN 50266-2-5 |
| Resistance to oil | According to DIN EN 60811-2-1, 168 h at 100°C |
| | According to DIN EN 50306 |
| Other resistance | Resistance to fuels (according to IEC 60811, 168 h at 70°C) |
| | UV resistant (according to DIN VDE 0276-605) |
| Special properties | Irradiated |
| Ambient temperature (operation) | -40 °C ... 105 °C (cable, fixed installation) |
| | -15 °C ... 105 °C (Cable, flexible installation) |
| | 20 °C ±5 °C (cable, drag chain applications) |

## Environmental and real-life conditions

### Ambient conditions

| | |
|---|---|
| Degree of protection | IP65 |
| | IP67 |
| | IP68 |
| | IP69K |
| Ambient temperature (operation) (male connector/female connector) | -40 °C ... 105 °C (Plug / socket) |
| Ambient temperature (operation) (Operation) | -40 °C ... 85 °C (On sudden changes in temperature (according to IEC 60512-11-4)) |

## Standards and regulations

### M12

| | |
|---|---|
| Standard designation | M12 connector |
| Standards/specifications | IEC 61076-2-101 |

## Drawings

Dimensional drawing

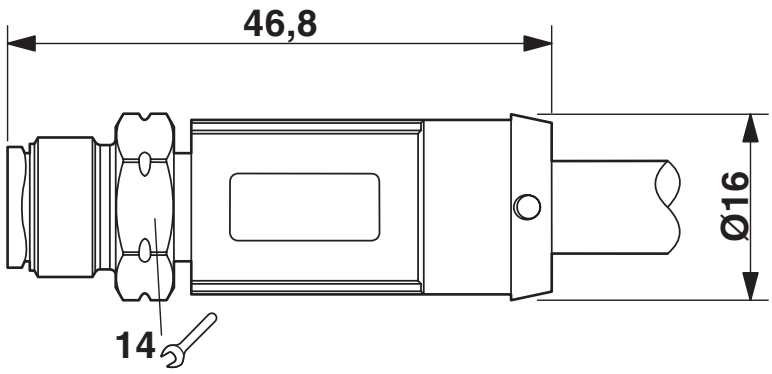


Plug, M12 x 1, straight, shielded

Dimensional drawing

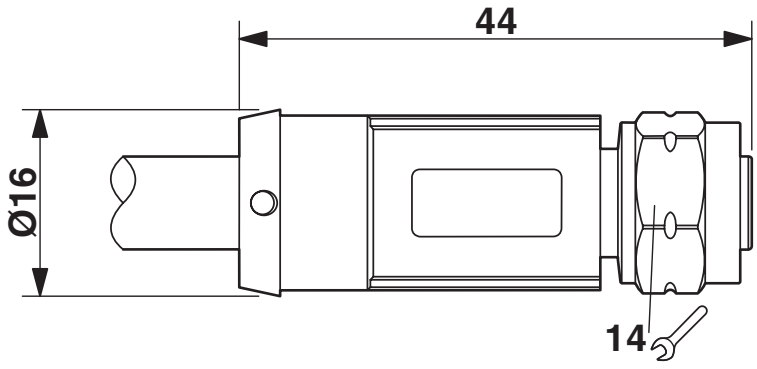


M12 x 1 socket, straight

Schematic diagram

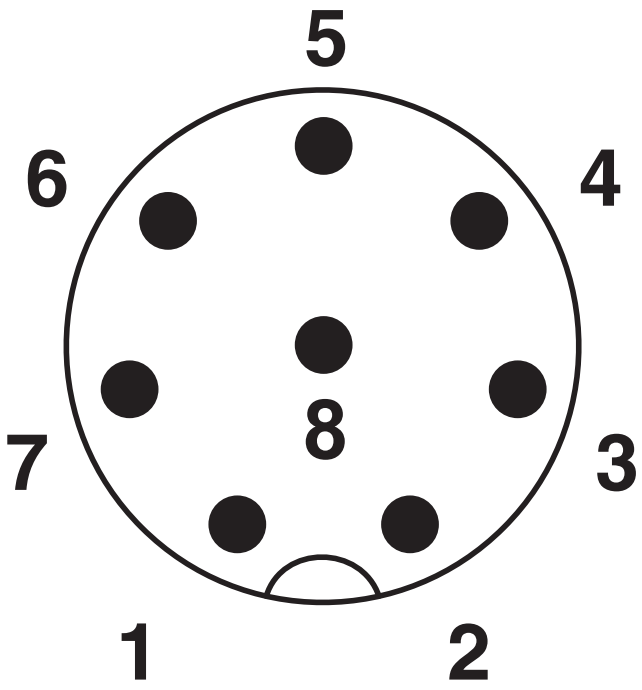


Pin assignment M12 plug, 8-pos., A-coded, view plug side

Schematic diagram

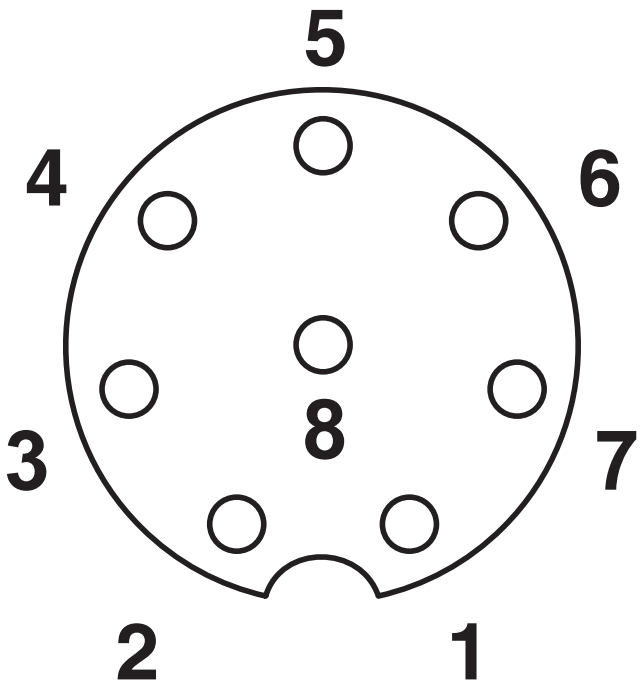


Pin assignment M12 socket, 8-pos., A-coded, view female side

Circuit diagram




Contact assignment of the M12 connector and the M12 socket

## Approvals

To download certificates, visit the product detail page: https://www.phoenixcontact.com/us/products/1407277

**DNV**
Approval ID: TAE00002K4

**EAC-RoHS**
Approval ID: RU D-DE.HB35.B.00387

## Classifications

### ECLASS

| | |
|---|---|
| ECLASS-13.0 | 27060311 |
| ECLASS-15.0 | 27060311 |

### ETIM

| | |
|---|---|
| ETIM 10.0 | EC001855 |

### UNSPSC

| | |
|---|---|
| UNSPSC 21.0 | 26121600 |

## Environmental product compliance

EU RoHS

| | |
|---|---|
| Fulfills EU RoHS substance requirements | Yes, No exemptions |

China RoHS

| | |
|---|---|
| Environment friendly use period (EFUP) | EFUP-E |
| | No hazardous substances above the limits |

EU REACH SVHC

| | |
|---|---|
| REACH candidate substance (CAS No.) | No substance above 0.1 wt% |

EF3.1 Climate Change

| | |
|---|---|
| CO2e kg | 3.114 kg CO2e |


Phoenix Contact 2026 © - all rights reserved
https://www.phoenixcontact.com



Phoenix Contact USA
586 Fulling Mill Road
Middletown, PA 17057, United States
(+717) 944-1300
info@phoenixcon.com