SAC-5P-10,0-28X/M12FS SH OD - Sensor/actuator cable

1407268

https://www.phoenixcontact.com/us/products/1407268

Please be informed that the data shown in this PDF document is generated from our online catalog. Please find the complete data in the user documentation. Our general terms of use for downloads are valid.



Sensor/actuator cable, 5-position, PE-X/PE-X halogen-free, black-gray RAL 7021, shielded, free cable end, on Socket straight M12, coding: A, cable length: 10 m, for outdoor applications, with high-grade steel knurl

Your advantages

- Easy and safe: 100 % electrically tested plug-in components
- Robust throughout: resistant to oil, UV, and ozone, withstands temperatures from -40°C … +105°C
- Reliable signal transmission – 360° shielding in environments with electromagnetic interference

Commercial data

Item number	1407268
Packing unit	1 pc
Minimum order quantity	1 pc
Note	Made to order (non-returnable)
Sales key	BF03
Product key	AF1CKA
GTIN	4046356773867
Weight per piece (including packing)	877.5 g
Weight per piece (excluding packing)	877.5 g
Customs tariff number	85444290
Country of origin	PL

Technical data

Product properties

Product type	Sensor/actuator cable
Application	External areas
Number of positions	5
No. of cable outlets	1
Shielded	yes
Coding	A

Insulation characteristics

Degree of pollution	3

Material specifications

Flammability rating according to UL 94	V0
Seal material	FPM
Material of grip body	PP
Contact material	CuSn
Contact surface material	Ni/Au
Contact carrier material	PP
Material for screw connection	Stainless steel

Electrical properties

Insulation resistance	≥ 100 MΩ
Nominal voltage U_N	48 V AC
	60 V DC
Nominal current I_N	4 A

Mechanical properties

Mechanical data

Insertion/withdrawal cycles	≥ 100

Signaling

Status display	no
Status display present	no

Connection data

Conductor connection

Tightening torque	0.4 Nm (M12 connector)

Connector

Connection 1

Type	free cable end

Connection 2

Type	Socket straight M12
Number of positions	5
Coding type	A

Cable/line

Cable length	10 m

PE-X black [28X]

Dimensional drawing	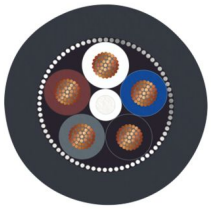
Cable weight	85 kg/km
Number of positions	5
Shielded	yes
Cable type	PE-X black [28X]
Conductor structure signal line	28x 0.15 mm
AWG signal line	20
Conductor cross-section	5x 0.5 mm²
Wire diameter incl. insulation	1.6 mm ±0.05 mm
External cable diameter	7.25 mm ±0.3 mm
Outer sheath, material	PE-X
External sheath, color	black-gray RAL 7021
Conductor material	Bare Cu litz wires
Material, filler	PP yarn
Material wire insulation	PE-X
Single wire, color	brown, white, blue, black, gray
Thickness, insulation	approx. 0.30 mm (Core insulation)
Inner sheath thickness	approx. 0.50 mm
Thickness, outer sheath	approx. 0.70 mm
Overall twist	5 wires around filler to the core
Length of twist, overall twist	68 mm
Optical shield covering	85 %
Max. conductor resistance	≤ 39 Ω/m (at 20 °C)
Insulation resistance	≥ 100 MΩ*km (at 20 °C)
Working capacitance	≤ 110 pF (Line-line)
	≤ 200 pF (Line-shield)
Nominal voltage, cable	≤ 300 V AC
Test voltage	≥ 3000 V AC (Spark test)

Test voltage Core/Shield	≥ 1000.00 V AC (for 10 s)
Minimum bending radius, fixed installation	5 x D
Minimum bending radius, flexible installation	10 x D
Smallest bending radius, fixed installation	37 mm
Smallest bending radius, movable installation	73 mm
Dynamic load capacity (bending)	Max. bending cycles: 1000000, Bending radius: 10 x D, Traversing path: 10 m, Traversing rate: 3 m/s, Acceleration: 10 m/s²
Halogen-free	in accordance with DIN VDE 0472 part 815
	in accordance with DIN EN 50267-2-1
Flame resistance	According to DIN EN 60332-1-2
	according to DIN EN 50266-2-5
Resistance to oil	According to DIN EN 60811-2-1, 168 h at 100°C
	According to DIN EN 50306
Other resistance	Resistance to fuels (according to IEC 60811, 168 h at 70°C)
	UV resistant (according to DIN VDE 0276-605)
	UV resistant (in accordance with DIN EN ISO 4892-2-A (750 h))
Special properties	Inductance approx. 0.48 mH/km
	Irradiated
Ambient temperature (operation)	-40 °C ... 105 °C (cable, fixed installation)
	-15 °C ... 105 °C (Cable, flexible installation)
	20 °C ±5 °C (cable, drag chain applications)

Environmental and real-life conditions

Ambient conditions

Degree of protection	IP65
	IP67
	IP68
	IP69K
Ambient temperature (operation) (male connector/female connector)	-40 °C ... 105 °C (Plug / socket)
Ambient temperature (operation) (Operation)	-40 °C ... 85 °C (On sudden changes in temperature (according to IEC 60512-11-4))

Standards and regulations

M12

Standard designation	M12 connector
Standards/specifications	IEC 61076-2-101

Drawings

Dimensional drawing

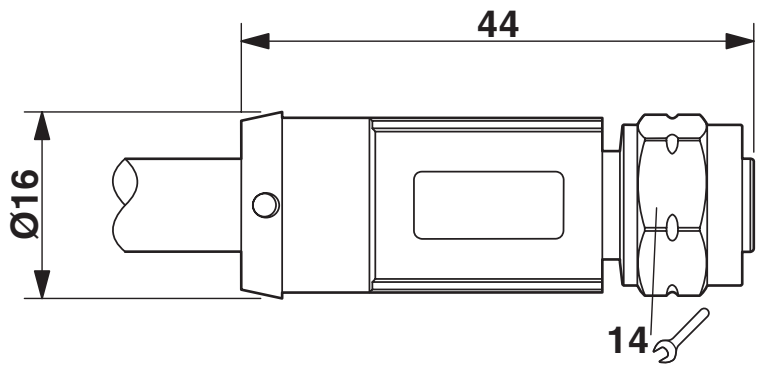

M12 x 1 socket, straight

Schematic diagram

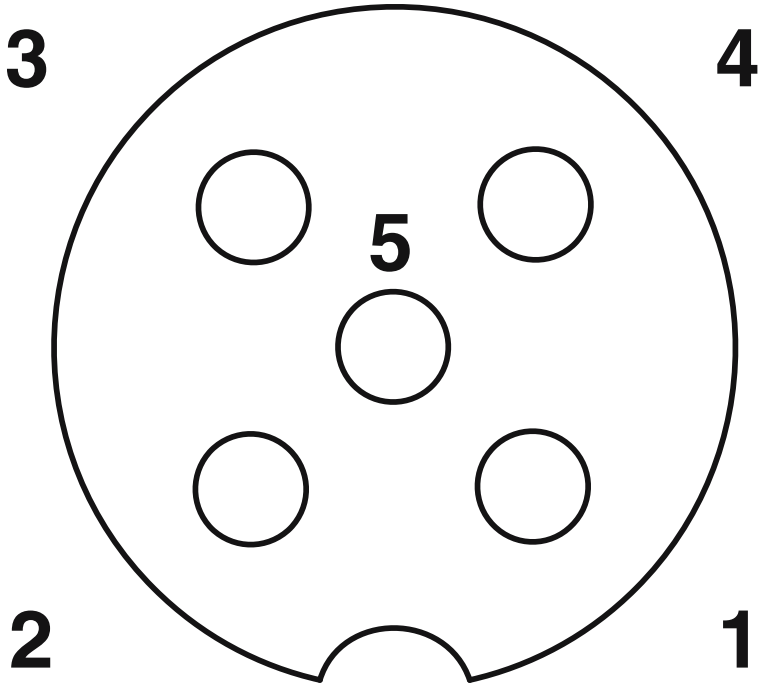

Pin assignment M12 socket, 5-pos., A-coded, socket side view

Circuit diagram

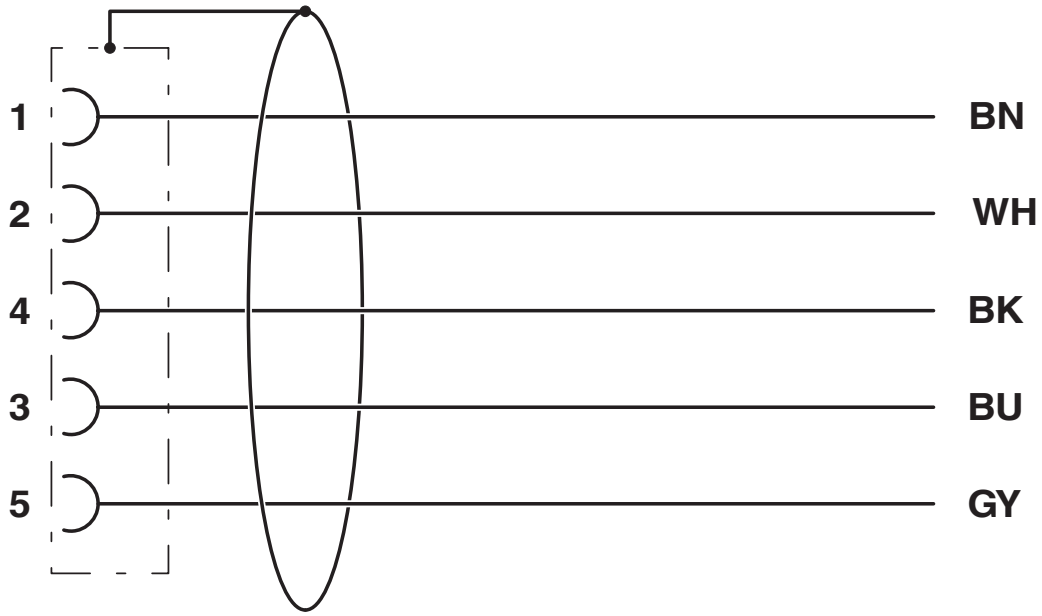

Contact assignment of the M12 socket

Approvals

To download certificates, visit the product detail page: https://www.phoenixcontact.com/us/products/1407268

DNV
Approval ID: TAE00002K4

EAC-RoHS
Approval ID: RU D-DE.HB35.B.00387

Classifications

ECLASS

ECLASS-13.0	27060311
ECLASS-15.0	27060311

ETIM

ETIM 10.0	EC001855

UNSPSC

UNSPSC 21.0	26121600

Environmental product compliance

EU RoHS

Fulfills EU RoHS substance requirements	Yes, No exemptions

China RoHS

Environment friendly use period (EFUP)	EFUP-E
	No hazardous substances above the limits

EU REACH SVHC

REACH candidate substance (CAS No.)	No substance above 0.1 wt%

EF3.1 Climate Change

CO2e kg	11.883 kg CO2e

Phoenix Contact 2026 © - all rights reserved
https://www.phoenixcontact.com

Phoenix Contact USA
586 Fulling Mill Road
Middletown, PA 17057, United States
(+717) 944-1300
info@phoenixcon.com