SAC-3P-M 8MR/ 5,0-600 FB - Sensor/actuator cable

1406475

https://www.phoenixcontact.com/us/products/1406475

Please be informed that the data shown in this PDF document is generated from our online catalog. Please find the complete data in the user documentation. Our general terms of use for downloads are valid.



Sensor/actuator cable, 3-position, PP-EPDM halogen-free, gray RAL 7035, Plug angled M8, coding: A, on free cable end, cable length: 5 m, Hygienic design, with plastic knurl

Your advantages

- Easy and safe: 100 % electrically tested plug-in components
- Contamination can be detected quickly – thanks to the light color

Commercial data

Item number	1406475
Packing unit	1 pc
Minimum order quantity	1 pc
Sales key	BF01
Product key	AF1BBA
GTIN	4046356780421
Weight per piece (including packing)	105 g
Weight per piece (excluding packing)	105 g
Customs tariff number	85444290
Country of origin	PL

Technical data

Product properties

Product type	Sensor/actuator cable
Application	Food processing industry
Number of positions	3
No. of cable outlets	1
Shielded	no
Coding	A

Insulation characteristics

Overvoltage category	II
Degree of pollution	3

Material specifications

Material of grip body	PP
Contact material	CuSn
Contact surface material	Ni/Au
Contact carrier material	PP
Material for screw connection	Polypropylene

Electrical properties

Insulation resistance	≥ 100 MΩ
Nominal voltage U_N	48 V AC
	60 V DC
Nominal current I_N	4 A

Mechanical properties

Mechanical data

Insertion/withdrawal cycles	≥ 100

Signaling

Status display	no
Status display present	no

Connection data

Conductor connection

Tightening torque	0.2 Nm (M8 connectors)

Connector

Connection 1

Type	Plug angled M8
Number of positions	3

Coding type	A

Connection 2

Type	free cable end

Cable/line

Cable length	5 m

Halogen-free PP gray [600]

Dimensional drawing	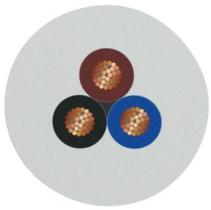
Cable weight	19 kg/km
Number of positions	3
Shielded	no
Cable type	Halogen-free PP gray [600]
Conductor structure signal line	32x 0.10 mm
AWG signal line	24
Conductor cross-section	3x 0.25 mm² (Signal line)
Wire diameter incl. insulation	1.17 mm ±0.02 mm (Signal line)
External cable diameter	4.20 mm ±0.15 mm
Outer sheath, material	PP-EPDM
External sheath, color	gray RAL 7035
Conductor material	Bare Cu litz wires
Material wire insulation	PP
Single wire, color	brown, blue, black
Thickness, insulation	≥ 0.21 mm (Core insulation)
Thickness, outer sheath	approx. 0.80 mm
Overall twist	3 wires, twisted
Length of twist, overall twist	40 mm
Max. conductor resistance	78 Ω/km (at 20 °C)
Insulation resistance	≥ 1 GΩ*km (at 20 °C)
Nominal voltage, cable	≤ 300 V AC
Test voltage	≥ 3000 V AC (Spark test)
Minimum bending radius, fixed installation	5 x D
Minimum bending radius, flexible installation	10 x D
Smallest bending radius, fixed installation	21 mm
Smallest bending radius, movable installation	42 mm
Dynamic load capacity (bending)	Max. bending cycles: 4000000, Bending radius: 10 x D, Traversing path: 10 m, Traversing rate: 3 m/s, Acceleration: 10

	m/s²
Dynamic load capacity (torsion)	Torsion: ±270 °/m, Torsion cycles: ≥4000000, Torsional frequency: max.25 Torsion cycles/min
Halogen-free	in accordance with DIN VDE 0472 part 815
	in accordance with DIN EN 50267-2-1
Other resistance	Resistant to cold bending and cold impacts (according to DIN EN 60811-1-4 (-40 °C))
Special properties	FDA compliant according to FDA 21 CFR 177.2600
	highly flexible
	Flexible cable conduit capable
Ambient temperature (operation)	-40 °C ... 105 °C (cable, fixed installation)
	-25 °C ... 105 °C (Cable, flexible installation)

Environmental and real-life conditions

Ambient conditions

Degree of protection	IP65
	IP67
	IP68
	IP69K
Ambient temperature (operation) (male connector/female connector)	-40 °C ... 105 °C (Plug / socket)

Standards and regulations

M8

Standard designation	M8 connector
Standards/specifications	IEC 61076-2-104
Standard designation	Material conformance
Standards/specifications	FDA 21 CFR 177.2600

Drawings

Dimensional drawing

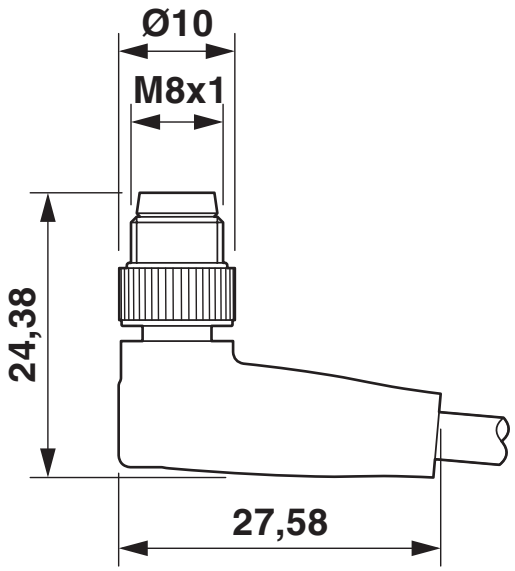

M8 x 1 male plug, angled version

Schematic diagram

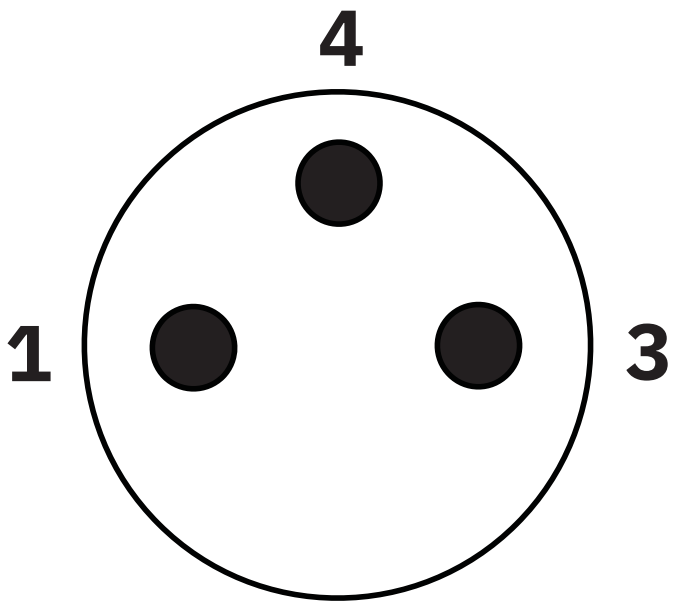

Pin assignment M8 plug, 3-pos., view male side

Circuit diagram

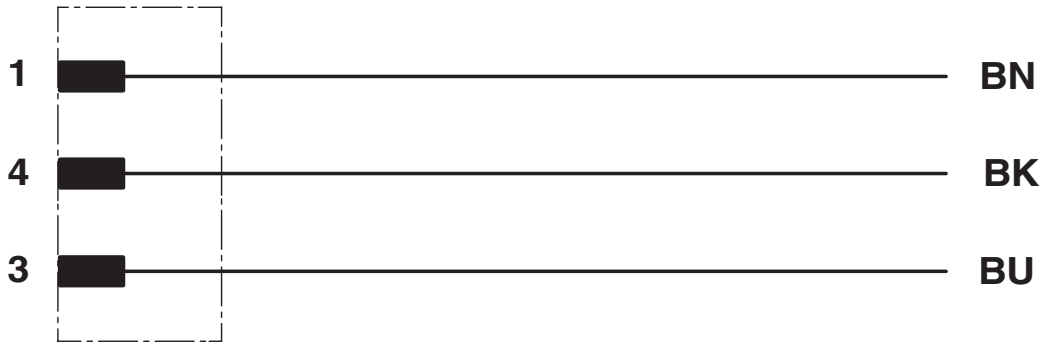

Contact assignment of the M8 plug

Approvals

To download certificates, visit the product detail page: https://www.phoenixcontact.com/us/products/1406475

EAC-RoHS
Approval ID: RU D-DE.HB35.B.00387

Classifications

ECLASS

ECLASS-13.0	27060311
ECLASS-15.0	27060311

ETIM

ETIM 10.0	EC001855

UNSPSC

UNSPSC 21.0	26121600

Environmental product compliance

EU RoHS

Fulfills EU RoHS substance requirements	Yes, No exemptions

China RoHS

Environment friendly use period (EFUP)	EFUP-E
	No hazardous substances above the limits

EU REACH SVHC

REACH candidate substance (CAS No.)	No substance above 0.1 wt%

EF3.1 Climate Change

CO2e kg	1.634 kg CO2e

Phoenix Contact 2026 © - all rights reserved
https://www.phoenixcontact.com

Phoenix Contact USA
586 Fulling Mill Road
Middletown, PA 17057, United States
(+717) 944-1300
info@phoenixcon.com