# SAC-3P-M12MR/ 1,5-542/M12FRSH - Sensor/actuator cable

1406260

https://www.phoenixcontact.com/us/products/1406260

Please be informed that the data shown in this PDF document is generated from our online catalog. Please find the complete data in the user documentation. Our general terms of use for downloads are valid.



Sensor/actuator cable, 3-position, PVC, yellow, shielded, Plug angled M12, coding: A, on Socket angled M12, coding: A, cable length: 1.5 m

## Commercial data

| | |
|---|---|
| Item number | 1406260 |
| Packing unit | 1 pc |
| Minimum order quantity | 1 pc |
| Note | Made to order (non-returnable) |
| Sales key | BF13 |
| Product key | AF1IDA |
| GTIN | 4046356797924 |
| Weight per piece (including packing) | 22.22 g |
| Weight per piece (excluding packing) | 22.22 g |
| Customs tariff number | 85444290 |
| Country of origin | US |

## Technical data

### Product properties

| | |
|---|---|
| Product type | Sensor/actuator cable |
| Application | Standard, U.S. cables |
| Number of positions | 3 |
| No. of cable outlets | 1 |
| Shielded | yes |
| Coding | A |

Insulation characteristics

| | |
|---|---|
| Overvoltage category | II |
| Degree of pollution | 3 |

### Material specifications

| | |
|---|---|
| Flammability rating according to UL 94 | HB |
| Seal material | NBR |
| Material of grip body | TPU, hardly inflammable, self-extinguishing |
| Contact material | CuSn |
| Contact surface material | Ni/Au |
| Contact carrier material | TPU GF |
| Material for screw connection | Zinc die-cast, nickel-plated |
| Outer sheath, material | PVC |

### Electrical properties

| | |
|---|---|
| Insulation resistance | ≥ 100 MΩ |
| Nominal voltage $U_N$ | 48 V AC |
| | 60 V DC |
| Nominal current $I_N$ | 4 A |

### Mechanical properties

Mechanical data

| | |
|---|---|
| Insertion/withdrawal cycles | ≥ 100 |

### Signaling

| | |
|---|---|
| Status display | no |
| Status display present | no |

### Connection data

Conductor connection

| | |
|---|---|
| Tightening torque | 0.4 Nm (M12 connector) |

### Connector

# SAC-3P-M12MR/ 1,5-542/M12FRSH - Sensor/actuator cable

1406260

https://www.phoenixcontact.com/us/products/1406260

Connection 1

| | |
|---|---|
| Type | Plug angled M12 |
| Number of positions | 3 |
| Coding type | A |

Connection 2

| | |
|---|---|
| Type | Socket angled M12 |
| Number of positions | 3 |
| Coding type | A |

## Cable/line

| | |
|---|---|
| Cable length | 1.5 m |

PVC yellow 105 °C [542]

| | |
|---|---|
| Dimensional drawing | 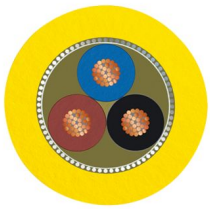 |
| Cable weight | 40 kg/km |
| UL AWM Style | 2517 (105 °C / 300 V) |
| Number of positions | 3 |
| Shielded | yes |
| Cable type | PVC yellow 105 °C [542] |
| Conductor structure signal line | 7x 0.25 mm |
| AWG signal line | 22 |
| Wire diameter incl. insulation | 1.27 mm ±0.03 mm |
| External cable diameter | 5.20 mm ±0.2 mm |
| Outer sheath, material | PVC |
| External sheath, color | yellow |
| Conductor material | Tin-plated Cu litz wires |
| Material wire insulation | PVC |
| Single wire, color | brown, blue, black |
| Overall twist | 3 wires, twisted |
| Optical shield covering | 85 % |
| Max. conductor resistance | max. 50.5 Ω/km (20 °C) |
| Insulation resistance | ≥ (550 M Ohms/m @ 500V) |
| Nominal voltage, cable | 300 V |
| Minimum bending radius, flexible installation | 12 x D |
| Smallest bending radius, movable installation | 63 mm |
| Flame resistance | FT4 |

| | |
|---|---|
| Other resistance | UV resistant |
| Special properties | UL standards PLTC and ITC |
| Ambient temperature (operation) | -30 °C ... 105 °C (cable, fixed installation) |
| | -5 °C ... 105 °C (Cable, flexible installation) |

## Environmental and real-life conditions

Ambient conditions

| | |
|---|---|
| Degree of protection | IP65 |
| | IP67 |
| Ambient temperature (operation) (male connector/female connector) | -25 °C ... 90 °C (Plug / socket) |
| Ambient temperature (operation) (Cable, fixed installation) | -40 °C ... 80 °C (cable, fixed installation) |
| Ambient temperature (operation) (Cable, flexible installation) | -5 °C ... 80 °C (Cable, flexible installation) |

## Standards and regulations

| | |
|---|---|
| Standard designation | M12 connector |
| Standards/specifications | IEC 61076-2-101 |

## Drawings

Dimensional drawing

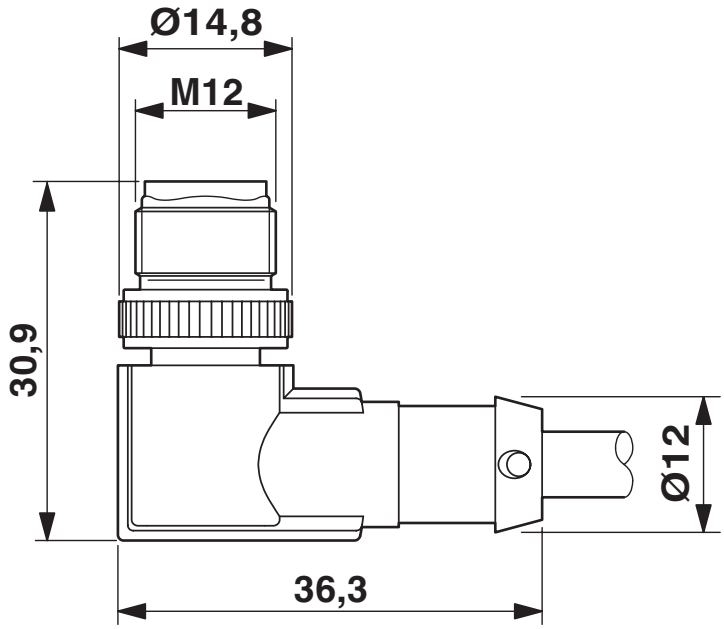


M12 x 1 male plug, angled, shielded

Dimensional drawing

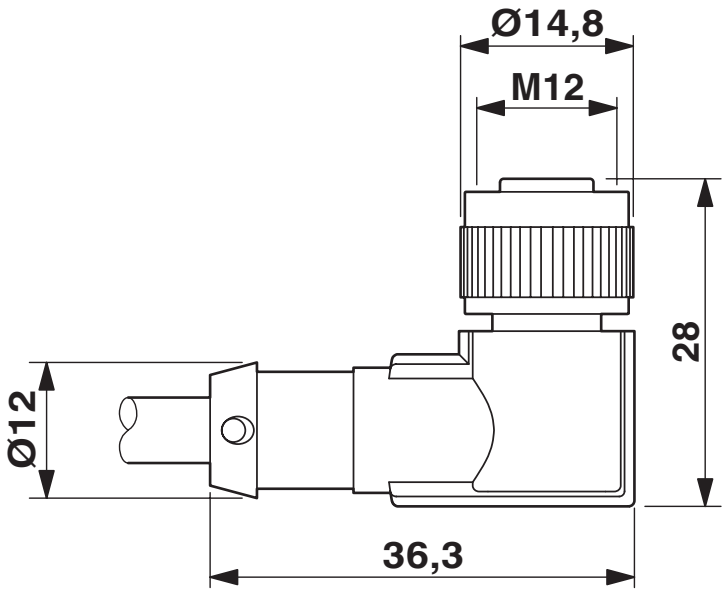


M12 x 1 socket, angled, shielded

Schematic diagram

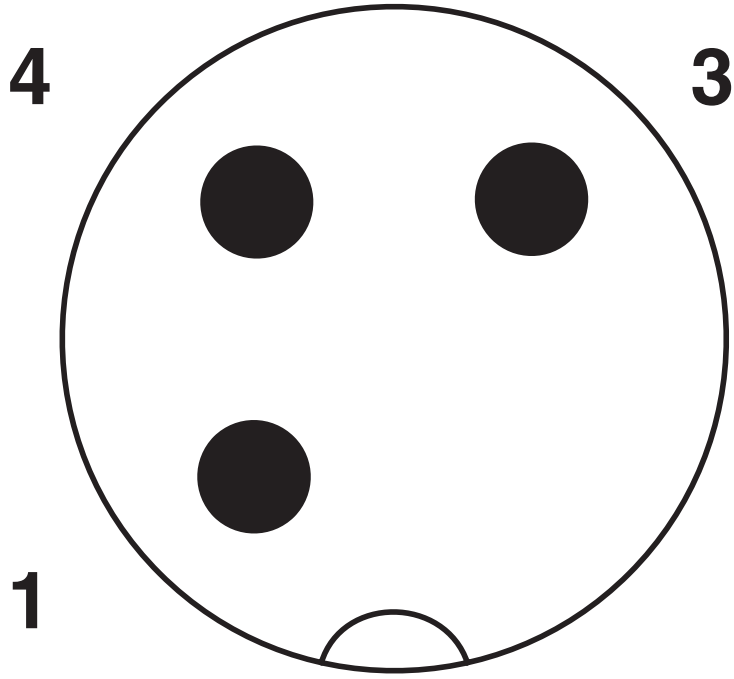


Pin assignment M12 plug, 3-pos., A-coded, view male side

Schematic diagram

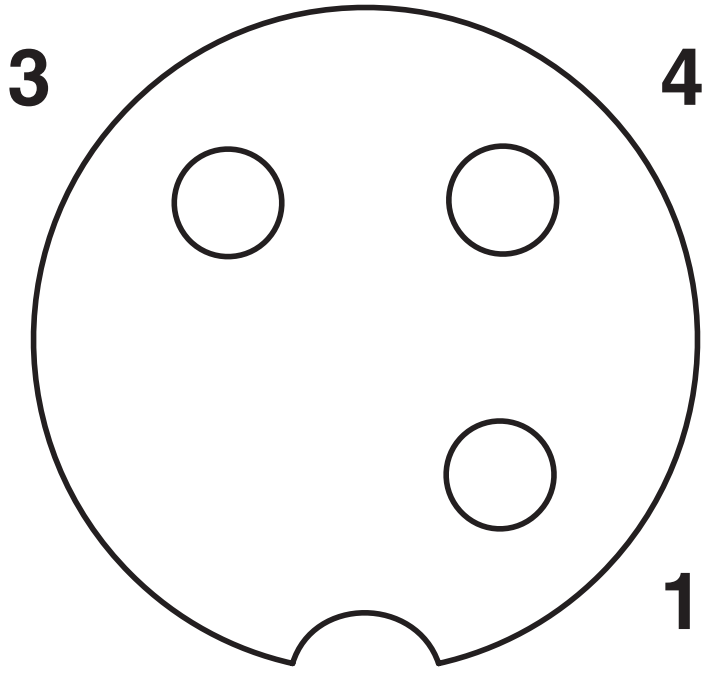


Pin assignment M12 socket, 3-pos., A-coded, view female side

Circuit diagram

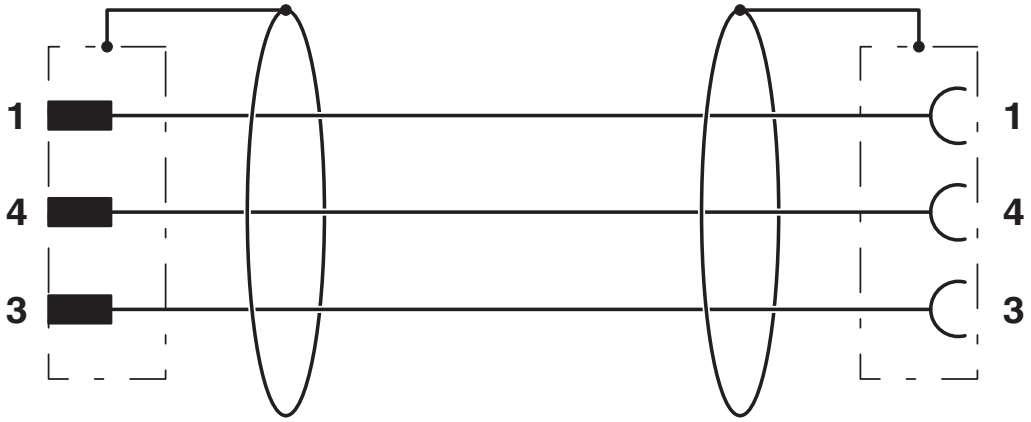


Contact assignment of M8 plugs / M12 sockets

## Classifications

### ECLASS

| | |
|---|---|
| ECLASS-13.0 | 27060311 |
| ECLASS-15.0 | 27060311 |

### ETIM

| | |
|---|---|
| ETIM 10.0 | EC001855 |

### UNSPSC

| | |
|---|---|
| UNSPSC 21.0 | 26121600 |

## Environmental product compliance

EU RoHS

| | |
|---|---|
| Fulfills EU RoHS substance requirements | Yes, No exemptions |

China RoHS

| | |
|---|---|
| Environment friendly use period (EFUP) | EFUP-E |
| | No hazardous substances above the limits |

EU REACH SVHC

| | |
|---|---|
| REACH candidate substance (CAS No.) | No substance above 0.1 wt% |


Phoenix Contact 2026 © - all rights reserved
https://www.phoenixcontact.com



Phoenix Contact USA
586 Fulling Mill Road
Middletown, PA 17057, United States
(+717) 944-1300
info@phoenixcon.com