SAC-5P-M12MS/ 0,5-924/M12FR - Bus system cable

1405991

https://www.phoenixcontact.com/us/products/1405991

Please be informed that the data shown in this PDF document is generated from our online catalog. Please find the complete data in the user documentation. Our general terms of use for downloads are valid.



Bus system cable, CANopen®, DeviceNet™, 5-position, PVC, gray, shielded, Plug straight M12, coding: A, on Socket angled M12, coding: A, cable length: 0.5 m, Connector unshielded

Commercial data

Item number	1405991
Packing unit	1 pc
Minimum order quantity	1 pc
Note	Made to order (non-returnable)
Sales key	BF15
Product key	AF1IHE
GTIN	4046356800372
Weight per piece (including packing)	52.8 g
Weight per piece (excluding packing)	52.8 g
Customs tariff number	85444290
Country of origin	US

Technical data

Product properties

Product type	Data cable preassembled
Application	Standard, U.S. cables
Number of positions	5
No. of cable outlets	1
Shielded	yes
Coding	A

Insulation characteristics

Overvoltage category	II
Degree of pollution	3

Interfaces

Bus system	CANopen®/DeviceNet™
Signal type/category	CANopen®
	DeviceNet™

Signaling

Status display	no
Status display present	no

Electrical properties

Insulation resistance	≥ 100 MΩ
Nominal voltage U_N	48 V AC
	60 V DC
Nominal current I_N	4 A
Transmission medium	Copper

Material specifications

Flammability rating according to UL 94	HB
Seal material	NBR
Material of grip body	TPU, hardly inflammable, self-extinguishing
Contact material	CuSn
Contact surface material	Ni/Au
Contact carrier material	TPU GF
Material for screw connection	Zinc die-cast, nickel-plated

Connector

Connection 1

Type	Plug straight M12
Number of positions	5
Coding type	A (Standard)

Connection 2

Type	Socket angled M12
Number of positions	5
Coding type	A (Standard)

Cable/line

Cable length	0.5 m

CANopen®/DeviceNet™, PVC, gray [924]

Dimensional drawing	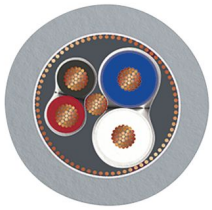
Cable weight	64.51 kg/km
UL AWM Style	2464 (80°C/300 V)
Number of positions	4
Shielded	yes
Cable type	CANopen®/DeviceNet™, PVC, gray [924]
Conductor structure	2xAWG22 (Signal) + 2xAWG22 (Power)
Signal runtime	4.46 ns/m
Conductor structure signal line	19x 0.15 mm
AWG signal line	22
Conductor structure, voltage supply	19x 0.15 mm
AWG power supply	22
Conductor cross-section	2x 0.34 mm² (Signal line)
	2x 0.34 mm² (Power supply)
Wire diameter incl. insulation	1.27 mm ±0.05 mm (Signal line)
	2.24 mm ±0.13 mm (Power supply)
External cable diameter	6.90 mm ±0.13 mm
Outer sheath, material	PVC
External sheath, color	gray
Conductor material	Bare Cu litz wires
Material wire insulation	Foamed PE (Signal line)
	PVC (Power supply)
Single wire, color	red-black, blue-white
Twisted pairs	2 cores to the pair
Type of pair shielding	Plastic-coated aluminum foil, aluminum side inside
Overall twist	2 pairs around a drain wire in the center to the core
Insulation resistance	≥ 59.38 Ω*m (Signal line)
	≥ 57.41 GΩ*km (Power supply)

Wave impedance	120 Ω ±12 Ω
Working capacitance	nom. 78.74 pF (per meter)
Minimum bending radius, flexible installation	15 x D
Smallest bending radius, movable installation	104 mm
Shield attenuation	0.95 dB (f = 125 kHz)
	1.64 dB (f = 500 kHz)
	2.30 dB (f = 1 MHz)
Flame resistance	FT4
Resistance to oil	yes
Other resistance	UV resistant
Special properties	UL standards PLTC and ITC
Ambient temperature (operation)	-30 °C ... 75 °C (cable, fixed installation)

Environmental and real-life conditions

Ambient conditions

Degree of protection	IP65
	IP67
	IP68
Ambient temperature (operation) (male connector/female connector)	-25 °C ... 90 °C (Plug / socket)

Drawings

Dimensional drawing

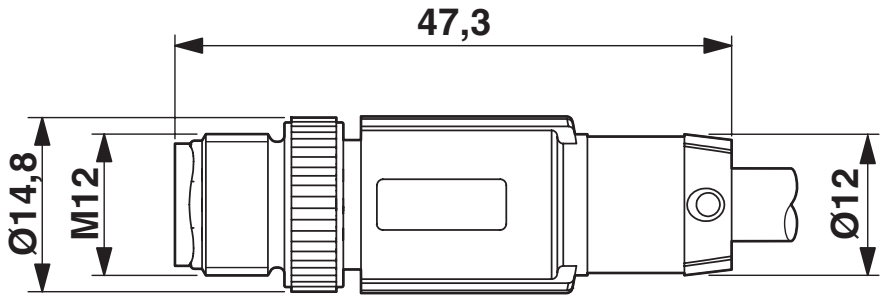

M12 x 1 plug, straight

Dimensional drawing

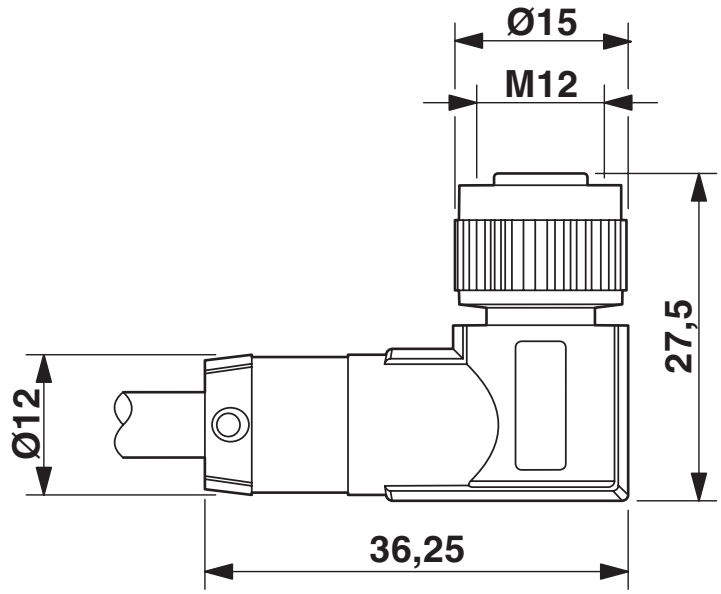

M12 x 1 socket, angled

Schematic diagram

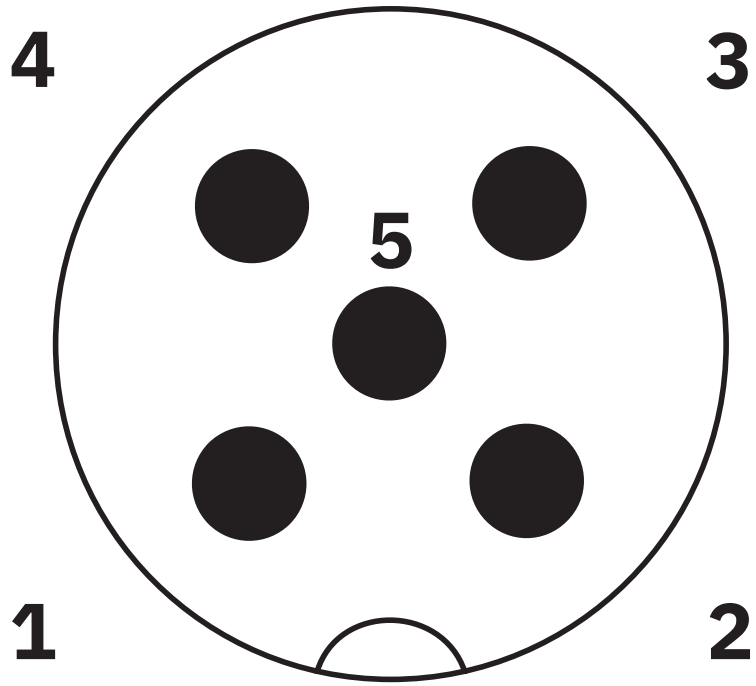

Pin assignment M12 male connector, 5-pos., A-coded, male side

Schematic diagram

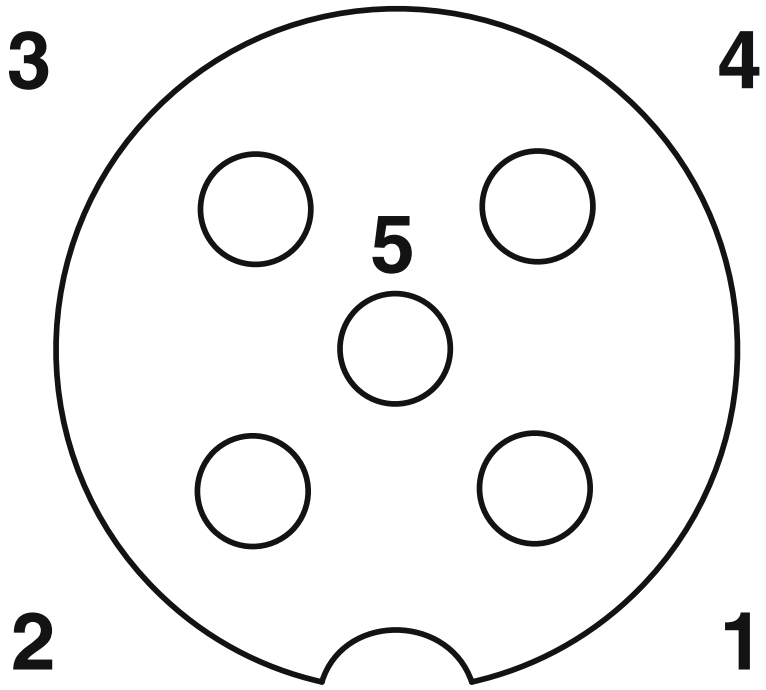

Pin assignment M12 socket, 5-pos., A-coded, socket side view

Circuit diagram

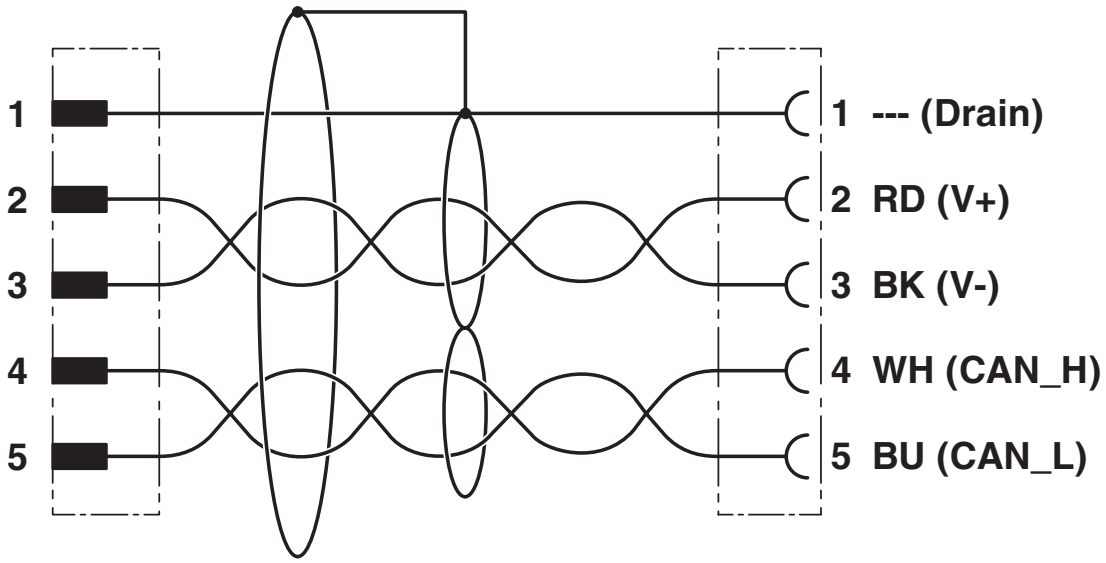

Contact assignment of the M12 plug and the M12 socket

Approvals

To download certificates, visit the product detail page: https://www.phoenixcontact.com/us/products/1405991

UL Listed
Approval ID: FILE E 221474

	Nominal voltage U_N	Nominal current I_N	Cross section AWG	Cross section mm^2
keine				
	125 V	4 A	-	-

cUL Listed
Approval ID: FILE E 221474

	Nominal voltage U_N	Nominal current I_N	Cross section AWG	Cross section mm^2
keine				
	125 V	4 A	-	-

Classifications

ECLASS

ECLASS-13.0	27060307
ECLASS-15.0	27060307

ETIM

ETIM 10.0	EC002599

UNSPSC

UNSPSC 21.0	26121600

Environmental product compliance

EU RoHS

Fulfills EU RoHS substance requirements	Yes, No exemptions

China RoHS

Environment friendly use period (EFUP)	EFUP-E
	No hazardous substances above the limits

EU REACH SVHC

REACH candidate substance (CAS No.)	Diazene-1,2-dicarboxamide (C,C'-azodi(formamide)) (ADCA)(CAS: 123-77-3)
	bis(2-ethylhexyl) tetrabromophthalate covering any of the individual isomers and/or combinations thereof(CAS: 26040-51-7)
	2-(2H-benzotriazol-2-yl)-4-(1,1,3,3-tetramethylbutyl)phenol (UV-329)(CAS: 3147-75-9)
SCIP	e2b4886f-8ef5-47bc-80d8-fbed53f129a8

Phoenix Contact 2026 © - all rights reserved
https://www.phoenixcontact.com

Phoenix Contact USA
586 Fulling Mill Road
Middletown, PA 17057, United States
(+717) 944-1300
info@phoenixcon.com