VS-ASI-2FC-FIX - Fastening clip

1404757

https://www.phoenixcontact.com/us/products/1404757

Please be informed that the data shown in this PDF document is generated from our online catalog. Please find the complete data in the user documentation. Our general terms of use for downloads are valid.



Fastening clip for two AS-Interface flat conductors, self-adhesive and with a 3 mm hole for additional fastening, plastic, gray

Commercial data

Item number	1404757
Packing unit	20 pc
Minimum order quantity	20 pc
Note	Made to order (non-returnable)
Sales key	BF46
Product key	AF1ZVX
GTIN	4046356322348
Weight per piece (including packing)	4.056 g
Weight per piece (excluding packing)	3.97 g
Customs tariff number	39269097
Country of origin	US

Technical data

Product properties

Product type	Mounting material

Dimensions

Dimensional drawing	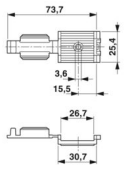
Width	27 mm
Height	12 mm
Length	74 mm

Material specifications

Material	PA 6.6

Drawings

Dimensional drawing

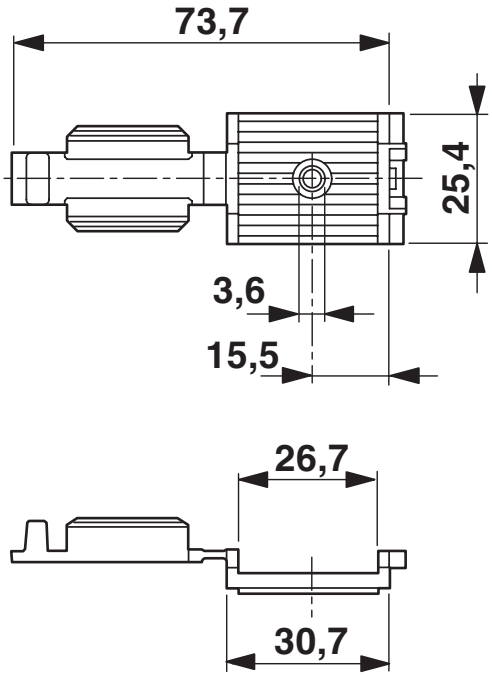

Classifications

ECLASS

ECLASS-13.0	27440192
ECLASS-15.0	27440192

ETIM

ETIM 10.0	EC002943

UNSPSC

UNSPSC 21.0	39121400

Environmental product compliance

EU RoHS

Fulfills EU RoHS substance requirements	Yes, No exemptions

China RoHS

Environment friendly use period (EFUP)	EFUP-E
	No hazardous substances above the limits

EU REACH SVHC

REACH candidate substance (CAS No.)	No substance above 0.1 wt%

EF3.1 Climate Change

CO2e kg	0.036 kg CO2e

Phoenix Contact 2026 © - all rights reserved
https://www.phoenixcontact.com

Phoenix Contact USA
586 Fulling Mill Road
Middletown, PA 17057, United States
(+717) 944-1300
info@phoenixcon.com