SACC-M12FST-3PECON-PG11-M - Power connector

1404644

https://www.phoenixcontact.com/us/products/1404644

Please be informed that the data shown in this PDF document is generated from our online catalog. Please find the complete data in the user documentation. Our general terms of use for downloads are valid.



Power connector, Universal, 4-position, unshielded, Socket straight M12, coding: T, Screw connection, knurl material: Zinc die-cast, nickel-plated, cable gland Pg11, external cable diameter 8 mm ... 10 mm, For direct current up to 12 A/63 V

Your advantages

- Safe use in the field, thanks to a high degree of protection
- Screw connection: proven connection technology for a large selection of different conductors
- High-performance: DC connectors for up to 12 A and 63 V DC
- Protection against incorrect connection using special T-coding

Commercial data

Item number	1404644
Packing unit	1 pc
Minimum order quantity	1 pc
Sales key	BF30
Product key	AF2CAB
GTIN	4046356707756
Weight per piece (including packing)	28.2 g
Weight per piece (excluding packing)	24.84 g
Customs tariff number	85366990
Country of origin	DE

Technical data

Notes

General	Strip 22 mm off the cable sheath, strip 7 mm off the conductor insulation, crimp the ferrule, then shorten this to 5 mm. Length of conductor with shortened ferrule: 20 mm. Connect conductors and tighten the mounting screws with 0.2 Nm.
Assembly note	NOTE: Observe the permissible bending radii when routing cables, since the degree of protection may be at risk if the bending forces are too high. Reduce mechanical loads upstream of the connector, e.g., by using cable ties.

Mounting

Assembly note	The wires can be connected both with ferrules and without ferrules

Product properties

Product type	Circular connector (cable-side)
Application	Power
Number of positions	4
No. of cable outlets	1
Shielded	no
Coding	T
Cable outlet	straight
Pg screw connection	Pg11

Insulation characteristics

Overvoltage category	III
Degree of pollution	3

Dimensions

Dimensional drawing	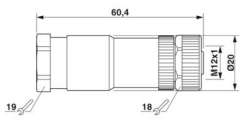
Width	20 mm
Height	20 mm
Length	60.4 mm
Wrench size, union nut	19 mm

External dimensions

Outside diameter	8 mm ... 10 mm

Housing

Diameter housing	20 mm

Material specifications

Flammability rating according to UL 94	V0
Seal material	Viton (M12 socket)
	NBR (Cable clamping)
Material of grip body	PA
Contact material	CuZn
Contact surface material	Au
Contact carrier material	PA
Material for screw connection	Zinc die-cast, nickel-plated

Connection data

Conductor connection

Connection method	Screw connection
Connection cross section	0.75 mm² ... 1.5 mm² (without ferrule)
	0.75 mm² ... 1.5 mm² (with ferrule)
	0.75 mm² ... 2.5 mm² (solid)
Connection cross section AWG	18 ... 14 (without ferrule)
	18 ... 16 (with ferrule)
Stripping length of the individual wire	5 mm
Tightening torque	0.4 Nm (M12 knurl)
	1.5 Nm ... 2 Nm (Pressure screw with sleeve housing)
	0.4 Nm (Screw plug insert with sleeve housing as far it will go)
	0.2 Nm (Screw terminal blocks)

Electrical properties

Rated surge voltage	1.5 kV
Insulation resistance	> 10 GΩ
Nominal voltage U_N	63 V DC
Nominal current I_N	12 A (when using 1.5 mm² conductors)
	12 A (at 40 °C)

Mechanical properties

Mechanical data

Insertion/withdrawal cycles	≥ 100

Connector

Connection 1

Head design	Socket
Head cable outlet	straight
Head thread type	M12
Coding	T

Interfaces

Signal type/category	Universal

Environmental and real-life conditions

Ambient conditions

Degree of protection	IP67
Ambient temperature (operation) (male connector/female connector)	-40 °C ... 85 °C (Plug / socket)

Standards and regulations

M12

Standard designation	M12 connector
Standards/specifications	IEC 61076-2-111

Drawings

Dimensional drawing

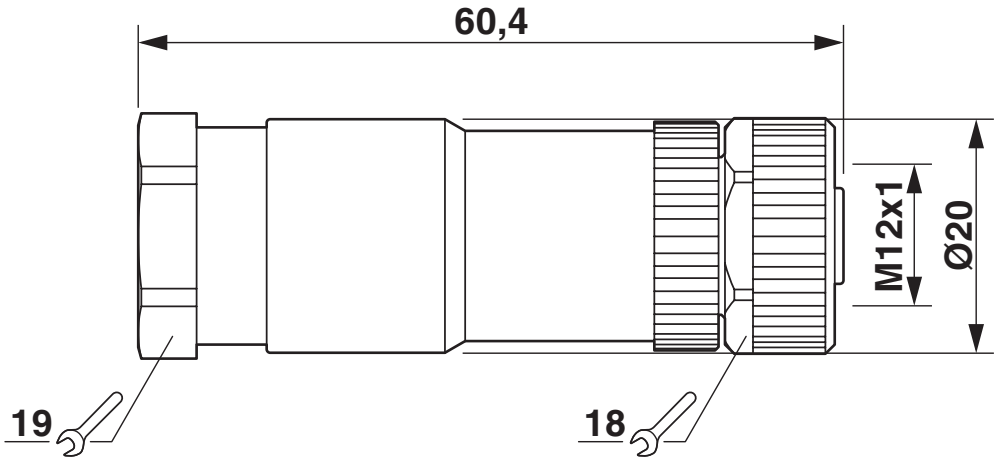

M12 x 1 socket, straight

Schematic diagram

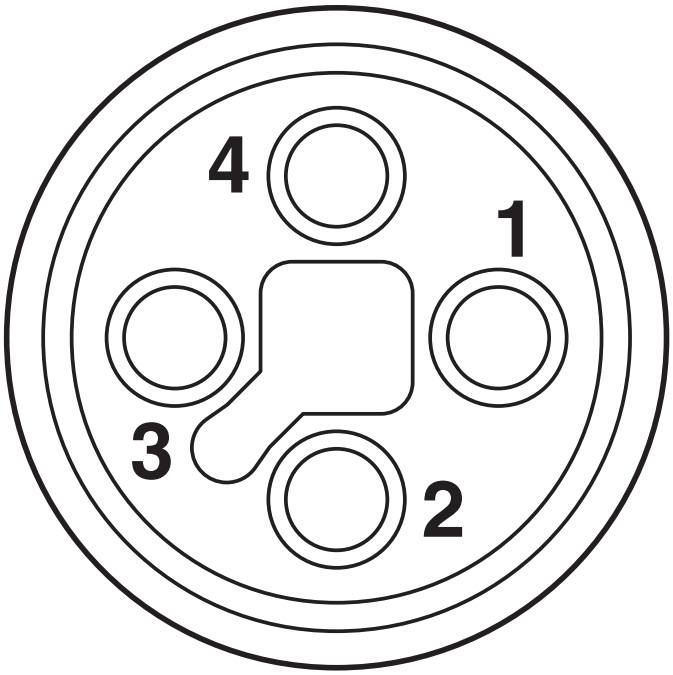

Pin assignment of M12 socket, 4-pos., T-coded, socket side view

Approvals

To download certificates, visit the product detail page: https://www.phoenixcontact.com/us/products/1404644

cUL Recognized
Approval ID: FILE E 221474

	Nominal voltage U_N	Nominal current I_N	Cross section AWG	Cross section mm^2
keine				
	60 V	12 A	- 16	-

UL Recognized
Approval ID: FILE E 221474

	Nominal voltage U_N	Nominal current I_N	Cross section AWG	Cross section mm^2
keine				
	60 V	12 A	- 16	-

Classifications

ECLASS

ECLASS-13.0	27440116
ECLASS-15.0	27440116

ETIM

ETIM 10.0	EC002635

UNSPSC

UNSPSC 21.0	39121400

Environmental product compliance

EU RoHS

Fulfills EU RoHS substance requirements	Yes
Exemption	6(c)

China RoHS

Environment friendly use period (EFUP)	EFUP-50
	An article-related China RoHS declaration table can be found in the download area for the respective article under "Manufacturer declaration". For all articles with EFUP-E, no China RoHS declaration table issued and required.

EU REACH SVHC

REACH candidate substance (CAS No.)	Lead(CAS: 7439-92-1)
SCIP	40d182d9-4760-4f0e-a616-fd6e7af3af6c

EF3.1 Climate Change

CO2e kg	1.178 kg CO2e

Phoenix Contact 2026 © - all rights reserved
https://www.phoenixcontact.com

Phoenix Contact USA
586 Fulling Mill Road
Middletown, PA 17057, United States
(+717) 944-1300
info@phoenixcon.com