SI-SES-R1A - Data interface

1404513

https://www.phoenixcontact.com/us/products/1404513

Please be informed that the data shown in this PDF document is generated from our online catalog. Please find the complete data in the user documentation. Our general terms of use for downloads are valid.

Service socket with RJ45 (socket/socket), 8-pos. metal, CAT5e connection



Commercial data

Item number	1404513
Packing unit	1 pc
Minimum order quantity	1 pc
Sales key	BF69
Product key	AF7EGX
GTIN	4046356698535
Weight per piece (including packing)	16.8 g
Weight per piece (excluding packing)	15.85 g
Customs tariff number	85366990
Country of origin	CZ

Technical data

Product properties

Product type	Data front plate
Number of positions	8
Connection profile	RJ45
Shielded	yes

Insulation characteristics

Degree of pollution	3

Electrical properties

Contact resistance	< 30 mΩ
Insulation resistance	> 500 MΩ
Nominal voltage U_N	24 V AC (max. 50 V)
Nominal current I_N	max. 1.5 A
Transmission speed	100 Mbps

Material specifications

Material Housing	PA
Flammability rating according to UL 94	V0
Contact material	CuSn

Mechanical properties

Mechanical data

Insertion/withdrawal cycles	> 100

Environmental and real-life conditions

Ambient conditions

Degree of protection	IP65 (with closed protective cover)
	IP20 (when plugged in)
Ambient temperature (operation)	-25 °C ... 70 °C
Ambient temperature (storage/transport)	-25 °C ... 85 °C

Mounting

Assembly note	Front panel cut-out D = 22.5 mm

Drawings

Dimensional drawing

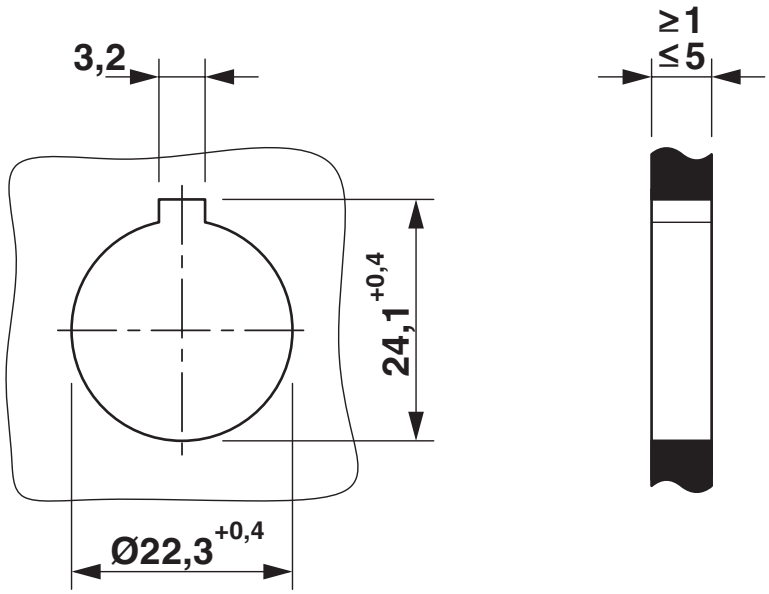

Mounting cutout

Classifications

ECLASS

ECLASS-13.0	27440192
ECLASS-15.0	27182806

ETIM

ETIM 10.0	EC000456

UNSPSC

UNSPSC 21.0	39121400

Environmental product compliance

EU RoHS

Fulfills EU RoHS substance requirements	Yes
Exemption	6(c)

China RoHS

Environment friendly use period (EFUP)	EFUP-50
	An article-related China RoHS declaration table can be found in the download area for the respective article under "Manufacturer declaration". For all articles with EFUP-E, no China RoHS declaration table issued and required.

EU REACH SVHC

REACH candidate substance (CAS No.)	No substance above 0.1 wt%

Phoenix Contact 2026 © - all rights reserved
https://www.phoenixcontact.com

Phoenix Contact USA
586 Fulling Mill Road
Middletown, PA 17057, United States
(+717) 944-1300
info@phoenixcon.com