VS-PNRJ45R-PNRJ45R-93K-0,3 - Patch cable

1402503

https://www.phoenixcontact.com/us/products/1402503

Please be informed that the data shown in this PDF document is generated from our online catalog. Please find the complete data in the user documentation. Our general terms of use for downloads are valid.



Sercos III patch cable

Sercos III patch cable, shielded, star quad, AWG 22 stranded (7-wire), RAL 3020 (traffic red), RJ45 connector/IP 20, angled, to RJ45 connector/IP20, angled, length: 0.3 m

Commercial data

Item number	1402503
Packing unit	1 pc
Minimum order quantity	1 pc
Sales key	AB11
Product key	ABNABA
GTIN	4046356622516
Weight per piece (including packing)	51.2 g
Weight per piece (excluding packing)	28.68 g
Customs tariff number	85444210
Country of origin	PL

Technical data

Product properties

Product type	Data cable preassembled
Product family	RJ45 INDUSTRIAL PN4 CAT5
Application	Standard
Number of positions	4
Shielded	yes

Insulation characteristics

Degree of pollution	1

Interfaces

Signal type/category	Sercos CAT5, 100 Mbps

Signaling

Status display	no

Electrical properties

Rated voltage (III/3)	72 V (DC)
Transmission medium	Copper
Transmission speed	100 Mbps
Transmission characteristics (category)	CAT5

Material specifications

Flammability rating according to UL 94	V0

Connector

Connection 1

Type	Plug bottom RJ45 / IP20
Number of positions	4 (8)
Shielded	yes
Handle color	black
Material	CuSn (Contact)
	Ni/Au (Contact surface)
	PA (Contact carrier)
	PA (Housing)
Insertion/withdrawal cycles	≥ 750
Degree of protection	IP20
Ambient temperature (operation)	-25 °C ... 80 °C

Connection 2

Type	Plug straight RJ45 / IP20
Number of positions	4 (8)

Shielded	yes
Handle color	black
Material	CuSn (Contact)
	Ni/Au (Contact surface)
	PA (Contact carrier)
	PA (Housing)
Insertion/withdrawal cycles	≥ 750
Degree of protection	IP20
Ambient temperature (operation)	-25 °C ... 80 °C

Cable/line

Cable length	0.3 m

Sercos III [93K]

Dimensional drawing	
Shielded	yes
UL AWM Style	21694 (60 °C / 600 V)
Cable weight	68 kg/km
Cable type	Sercos III
Cable type (abbreviation)	93K
Signal type/category	Sercos CAT5 (IEC 11801), 100 Mbps
Cable structure	1x4xAWG22/7, SF/TQ
External cable diameter	6.50 mm ±0.2 mm
Outer sheath, material	PVC
External sheath, color	signal red RAL 3020
Thickness, outer sheath	approx. 0.90 mm
Material, inner sheath	PVC
Conductor material	Tin-plated Cu litz wires
Conductor structure signal line	7x 0.25 mm
AWG signal line	22
Conductor cross-section	4x 0.34 mm²
Material wire insulation	PE
Wire diameter incl. insulation	approx. 1.55 mm
Single wire, color	white, yellow, blue, orange
Type of pair shielding	Aluminum-lined polyester foil
Overall twist	Star quad
Shielding	Tinned copper braided shield

Nominal voltage, cable	600 V
Test voltage Core/Core	2000 V (50 Hz, 1 min.)
Test voltage Core/Shield	2000.00 V (50 Hz, 1 min.)
Cable resistance	≤ 120 Ω/km
Cable insulation resistance	≥ 0.5 GΩ*km
Coupling resistance	≤ 20.00 mΩ/m (at 10 Hz)
Wave impedance	100 Ω ±15 Ω (at 100 MHz)
Signal runtime	5.3 ns/m
Minimum bending radius, fixed installation	3 x D
Minimum bending radius, flexible installation	7 x D
Resistance to oil	Resistant to oil to a limited extent
Flame resistance	according to UL 1685 (CSA FT 4)
Other resistance	UV resistant (according to UL 1581, Section 1200)
Ambient temperature (operation)	-40 °C ... 70 °C (Cable, flexible installation)
	-40 °C ... 70 °C (cable, fixed installation)

Environmental and real-life conditions

Ambient conditions

Degree of protection	IP20
	IP20

Drawings

Dimensional drawing

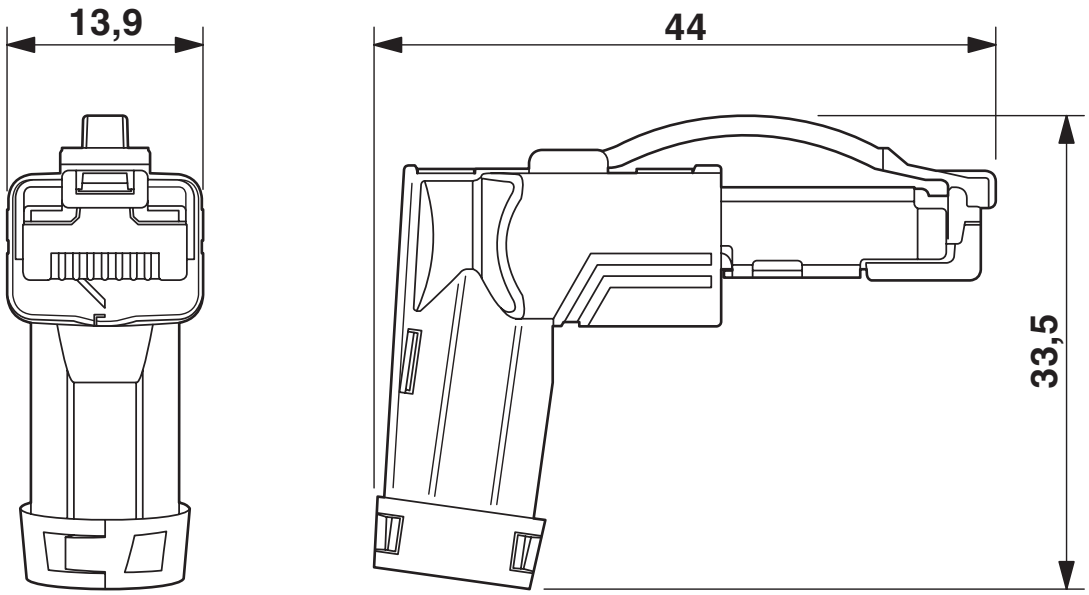

RJ45 connector, IP20, angled

Circuit diagram

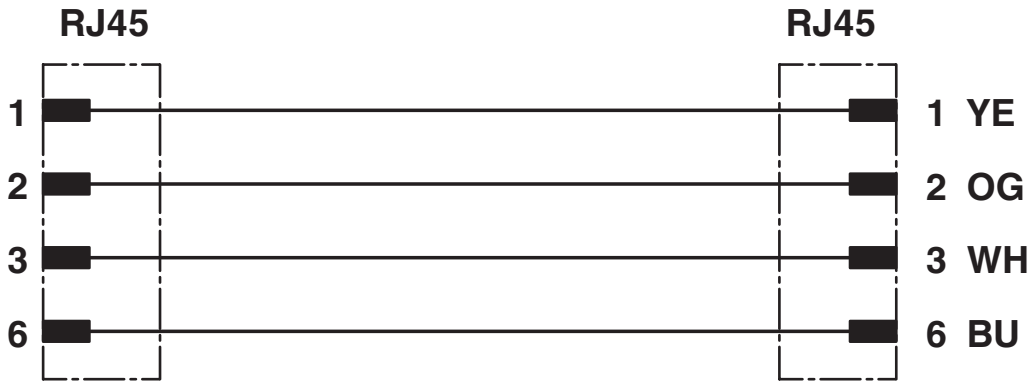

Classifications

ECLASS

ECLASS-13.0	27060307
ECLASS-15.0	27060307

ETIM

ETIM 10.0	EC002599

UNSPSC

UNSPSC 21.0	26121600

Environmental product compliance

EU RoHS

Fulfills EU RoHS substance requirements	Yes, No exemptions

China RoHS

Environment friendly use period (EFUP)	EFUP-E
	No hazardous substances above the limits

EU REACH SVHC

REACH candidate substance (CAS No.)	No substance above 0.1 wt%

Phoenix Contact 2026 © - all rights reserved
https://www.phoenixcontact.com

Phoenix Contact USA
586 Fulling Mill Road
Middletown, PA 17057, United States
(+717) 944-1300
info@phoenixcon.com