SAC-3P-MS-A-1L-V SCO/.../... - Sensor/actuator cable

1400874

https://www.phoenixcontact.com/us/products/1400874

Please be informed that the data shown in this PDF document is generated from our online catalog. Please find the complete data in the user documentation. Our general terms of use for downloads are valid.



Sensor/actuator cable, 3-position, Variable cable type, Plug straight M12 SPEEDCON, coding: A, on Valve connector A, with 1 LED, Wiring: Varistor, cable length: Free input (0.2 m ... 100. 0 m)

Your advantages

- Easy and safe: 100 % electrically tested plug-in components
- Save time, thanks to installation with SPEEDCON fast locking system
- Convenient: increased machine availability thanks to quick and easy diagnostics
- Flexible solutions - configurable materials with variable cable types and cable lengths

Commercial data

Item number	1400874
Packing unit	1 pc
Minimum order quantity	1 pc
Note	Made to order (non-returnable)
Sales key	BF17
Product key	AF1DJA
Customs tariff number	85444290
Country of origin	PL

Technical data

Product properties

Product type	Sensor/actuator cable with valve connector
Application	Standard
	Robots and drag chains
Number of positions	3
No. of cable outlets	1
Shielded	no
Coding	A

Insulation characteristics

Overvoltage category	III
Degree of pollution	3

Connection data

Conductor connection

Tightening torque	0.4 Nm (M12 connector)
	0.6 Nm (Valve connector)

Material specifications

Flammability rating according to UL 94	HB
Seal material	TPU (Seal molded)
Material housing valve plug	TPU
Material of grip body	TPU
Contact material	CuSn
Contact surface material	Ni/Au
Contact carrier material	TPU GF
Contact material	CuSn
Valve plug contact insert material	PA 6.6
Contact surface material	Sn
Material for screw connection	Zinc die-cast, nickel-plated

Electrical properties

Insulation resistance	≥ 100 MΩ
Nominal voltage U_N	24 V AC
	24 V DC
Nominal current I_N	4 A

Valve connector characteristics

Fixing screws	M3 x 29

Mechanical properties

Mechanical data

Insertion/withdrawal cycles	≥ 100 (M12 connector)

Signaling

Status display	1 LED
Status display present	yes

Connector

Connection 1

Type	Plug straight M12 SPEEDCON
Number of positions	3
Locking type	SPEEDCON
Coding type	A

Connection 2

Type	Valve connector A
Material	CuSn (Contact)
	Sn (Contact surface)
	PA 6.6 (Contact carrier)
	TPU (Housing)
Protective circuit	Varistor

Cable/line

Cable length	Free input (0.2 m ... 100.0 m)

PUR halogen-free black [PUR]

Dimensional drawing	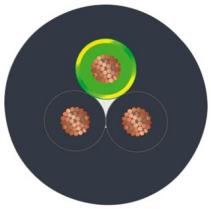
Cable weight	30 kg/km
UL AWM Style	20549
Number of positions	3
Shielded	no
Cable type	PUR halogen-free black [PUR]
	PUR halogen-free black PUR
Conductor structure signal line	28x 0.15 mm
AWG signal line	20
Conductor cross-section	3x 0.5 mm²
Wire diameter incl. insulation	1.5 mm ±0.05 mm (Signal line)
External cable diameter	4.50 mm ±0.2 mm

Outer sheath, material	PUR
External sheath, color	black-gray RAL 7021
Conductor material	Bare Cu litz wires
Material wire insulation	PP
Single wire, color	black 1, black 2, green/yellow
Overall twist	3 wires, twisted
Max. conductor resistance	39 Ω/km (at 20 °C)
Insulation resistance	min. 20 MΩ*km
Nominal voltage, cable	≤ 300 V
Test voltage	≥ 1200 V
Minimum bending radius, fixed installation	5 x D
Minimum bending radius, flexible installation	10 x D
Smallest bending radius, fixed installation	22.5 mm
Smallest bending radius, movable installation	45 mm
Dynamic load capacity (bending)	Max. bending cycles: 15000000, Bending radius: 50 mm, Traversing path: 0.9 m, Traversing rate: 5 m/s, Acceleration: 30 m/s²
Halogen-free	in accordance with DIN VDE 0472 part 815
Flame resistance	according to DIN VDE 0482
	According to DIN EN 50265-2-1
Resistance to oil	in accordance with DIN EN 60811-2-1
Other resistance	largely oil-resistant
	partly UV-resistant (in accordance with DIN EN ISO 4892-2-A)
Ambient temperature (operation)	-40 °C ... 80 °C (cable, fixed installation)
	-20 °C ... 80 °C (Cable, flexible installation)

PUR/PVC, 0.75 mm², black [116]

Dimensional drawing	
Cable weight	53.4 kg/km
UL AWM Style	20549
Number of positions	3
Shielded	no
Cable type	PUR/PVC, 0.75 mm², black [116]
	PUR/PVC, 0.75 mm², black 116
Conductor structure signal line	24x 0.20 mm
AWG signal line	18
Conductor cross-section	3x 0.75 mm²
Wire diameter incl. insulation	1.7 mm ±0.05 mm

External cable diameter	5.80 mm ±0.2 mm
Outer sheath, material	PUR
External sheath, color	black RAL 9005
Conductor material	Bare Cu litz wires
Material wire insulation	PVC
Single wire, color	black 1, black 2, green/yellow
Overall twist	3 wires, twisted
Max. conductor resistance	26 Ω/km (at 20 °C)
Insulation resistance	≥ 20 MΩ*km
Nominal voltage, cable	300 V
Test voltage	1200 V
Minimum bending radius, fixed installation	5 x D
Minimum bending radius, flexible installation	10 x D
Smallest bending radius, fixed installation	29 mm
Smallest bending radius, movable installation	58 mm
Dynamic load capacity (bending)	Max. bending cycles: 1000000, Traversing path: 10 m, Traversing rate: 2 m/s, Acceleration: 2.5 m/s²
Flame resistance	DIN VDE 0482
	DIN EN 50265-2-1
	in acc. with UL FT-2
Resistance to oil	in accordance with DIN EN 60811-2-1
Other resistance	Low adhesion
Special properties	flexible
Ambient temperature (operation)	-40 °C ... 80 °C (cable, fixed installation)
	-5 °C ... 80 °C (Cable, flexible installation)

PUR/PVC 0.75 mm² gray [117]

Dimensional drawing	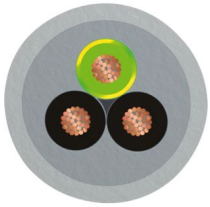
Cable weight	58.5 kg/km
UL AWM Style	20549
Number of positions	3
Shielded	no
Cable type	PUR/PVC 0.75 mm² gray [117]
	PUR/PVC 0.75 mm² gray 117
Conductor structure signal line	24x 0.20 mm
AWG signal line	18
Conductor cross-section	3x 0.75 mm² (Signal line)

Wire diameter incl. insulation	1.7 mm ±0.05 mm (Signal line)
External cable diameter	5.80 mm ±0.2 mm
Outer sheath, material	PUR
External sheath, color	gray RAL 7001
Conductor material	Bare Cu litz wires
Material wire insulation	PVC
Single wire, color	black 1, black 2, green/yellow
Overall twist	Wires twisted in layers
Max. conductor resistance	26 Ω/km (at 20 °C)
Insulation resistance	≥ 20 MΩ*km
Nominal voltage, cable	300 V
Test voltage	1200 V
Minimum bending radius, fixed installation	5 x D
Minimum bending radius, flexible installation	10 x D
Smallest bending radius, fixed installation	29 mm
Smallest bending radius, movable installation	58 mm
Dynamic load capacity (bending)	Max. bending cycles: 1000000, Traversing rate: 2 m/s, Acceleration: 2.5 m/s²
Flame resistance	according to DIN VDE 0482
	According to DIN EN 50265-2-1
	in acc. with UL FT-2
Ambient temperature (operation)	-40 °C ... 80 °C (cable, fixed installation)
	-5 °C ... 80 °C (Cable, flexible installation)

PUR black [121]

Dimensional drawing	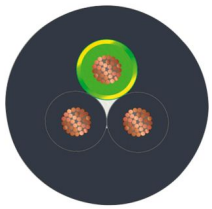
Cable weight	58.8 kg/km
UL AWM Style	20549
Number of positions	3
Shielded	no
Cable type	PUR black [121]
	PUR black 121
Conductor structure signal line	32x 0.20 mm
AWG signal line	17
Conductor cross-section	3x 1 mm²
Wire diameter incl. insulation	2.1 mm ±0.05 mm
External cable diameter	6.00 mm ±0.2 mm

Outer sheath, material	PUR
External sheath, color	black RAL 9005
Conductor material	Bare Cu litz wires
Material wire insulation	PP
Single wire, color	black 1, black 2, green/yellow
Overall twist	3 wires, twisted
Max. conductor resistance	19.5 Ω/km (at 20 °C)
Insulation resistance	≥ 20 MΩ*km
Nominal voltage, cable	300 V
Test voltage	1200 V
Minimum bending radius, fixed installation	5 x D
Minimum bending radius, flexible installation	10 x D
Smallest bending radius, fixed installation	30 mm
Smallest bending radius, movable installation	60 mm
Dynamic load capacity (bending)	Max. bending cycles: 3000000, Traversing rate: 2.5 m/s, Acceleration: 10 m/s²
Halogen-free	in accordance with DIN VDE 0472 part 815
Flame resistance	DIN VDE 0482
	DIN EN 50265-2-1
Resistance to oil	in accordance with DIN EN 60811-2-1
Other resistance	Low adhesion
Special properties	highly flexible
Ambient temperature (operation)	-40 °C ... 80 °C (cable, fixed installation)
	-20 °C ... 80 °C (Cable, flexible installation)

PUR irradiated halogen-free orange [150]

Dimensional drawing	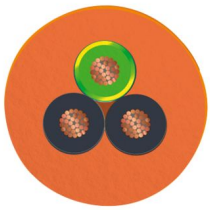
Cable weight	31 kg/km
Number of positions	3
Shielded	no
Cable type	PUR irradiated halogen-free orange [150]
	PUR irradiated halogen-free orange 150
Conductor structure signal line	28x 0.15 mm
AWG signal line	20
Conductor cross-section	3x 0.5 mm² (Signal line)
Wire diameter incl. insulation	1.46 mm ±0.02 mm (Signal line)
External cable diameter	4.50 mm ±0.15 mm

Outer sheath, material	PUR
External sheath, color	orange RAL 2003
Conductor material	Bare Cu litz wires
Material wire insulation	TPE-E
Single wire, color	black 1, black 2, green/yellow
Thickness, insulation	≥ 0.21 mm (Core insulation)
	approx. 0.60 mm (Outer cable sheath)
Overall twist	3 wires, twisted
Max. conductor resistance	max. 39 Ω/km (at 20 °C)
Insulation resistance	≥ 100 MΩ*km (at 20 °C)
Nominal voltage, cable	≤ 300 V
Test voltage	≥ 3000 V
Minimum bending radius, fixed installation	5 x D
Minimum bending radius, flexible installation	10 x D
Smallest bending radius, fixed installation	23 mm
Smallest bending radius, movable installation	45 mm
Dynamic load capacity (bending)	Max. bending cycles: 5000000, Bending radius: 45 mm, Traversing path: 10 m, Traversing rate: 3 m/s
Halogen-free	in accordance with DIN VDE 0472 part 815
Flame resistance	in accordance with DIN UL-Style 20549
Resistance to oil	in accordance with DIN EN 60811-2-1
Special properties	Silicone-free
	Irradiated
Ambient temperature (operation)	-25 °C ... 80 °C (cable, fixed installation)
	-5 °C ... 80 °C (Cable, flexible installation)

PUR halogen-free yellow [240]

Dimensional drawing	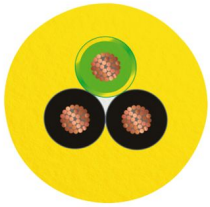
Cable weight	30 kg/km
UL AWM Style	20549 (80°C/300 V)
Number of positions	3
Shielded	no
Cable type	PUR halogen-free yellow [240]
	PUR halogen-free yellow 240
Conductor structure signal line	28x 0.15 mm
AWG signal line	20
Conductor cross-section	3x 0.5 mm²

Wire diameter incl. insulation	1.46 mm ±0.02 mm
External cable diameter	4.50 mm ±0.15 mm
Outer sheath, material	PUR
External sheath, color	yellow
Conductor material	Bare Cu litz wires
Material wire insulation	PP
Single wire, color	black 1, black 2, green/yellow
Thickness, insulation	≥ 0.21 mm
Thickness, outer sheath	approx. 0.60 mm
Overall twist	3 wires, twisted
Max. conductor resistance	≤ 39 Ω/km
Insulation resistance	≥ 10 GΩ*km
Nominal voltage, cable	≤ 300 V
Test voltage	≥ 3000 V
Minimum bending radius, fixed installation	5 x D
Minimum bending radius, flexible installation	10 x D
Smallest bending radius, fixed installation	23 mm
Smallest bending radius, movable installation	45 mm
Halogen-free	in accordance with DIN VDE 0472 part 815
Flame resistance	in accordance with DIN UL-Style 20549
Resistance to oil	in accordance with DIN EN 60811-2-1
Ambient temperature (operation)	-15 °C ... 80 °C (cable, fixed installation)

PUR halogen-free gray [280]

Dimensional drawing	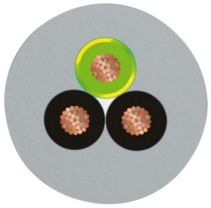
Cable weight	33.2 kg/km
UL AWM Style	20549
Number of positions	3
Shielded	no
Cable type	PUR halogen-free gray [280]
	PUR halogen-free gray 280
Conductor structure signal line	28x 0.15 mm
AWG signal line	20
Conductor cross-section	3x 0.5 mm² (Signal line)
Wire diameter incl. insulation	1.5 mm ±0.05 mm (Signal line)
External cable diameter	4.50 mm ±0.2 mm
Outer sheath, material	PUR

External sheath, color	gray RAL 7001
Conductor material	Bare Cu litz wires
Material wire insulation	PP
Single wire, color	black 1, black 2, green/yellow
Overall twist	Wires twisted in layers
Max. conductor resistance	39 Ω/km (at 20 °C)
Insulation resistance	≥ 20 MΩ*km
Nominal voltage, cable	300 V
Test voltage	1200 V
Minimum bending radius, fixed installation	5 x D
Minimum bending radius, flexible installation	10 x D
Smallest bending radius, fixed installation	22.5 mm
Dynamic load capacity (bending)	Max. bending cycles: 15000000, Bending radius: 50 mm, Traversing path: 0.9 m, Traversing rate: 5 m/s, Acceleration: 30 m/s²
Halogen-free	in accordance with DIN VDE 0472 part 815
Flame resistance	according to DIN VDE 0482
	According to DIN EN 50265-2-1
Resistance to oil	in accordance with DIN EN 60811-2-1
Ambient temperature (operation)	-40 °C ... 80 °C (cable, fixed installation)
	-20 °C ... 80 °C (Cable, flexible installation)

PVC black [PVC]

Dimensional drawing	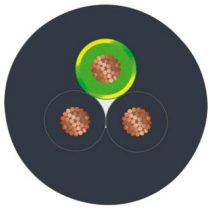
Cable weight	38.6 kg/km
UL AWM Style	2464
Number of positions	3
Shielded	no
Cable type	PVC black [PVC]
	PVC black PVC
Conductor structure signal line	16x 0.20 mm
AWG signal line	20
Conductor cross-section	3x 0.5 mm²
Wire diameter incl. insulation	1.5 mm ±0.05 mm
External cable diameter	4.80 mm ±0.2 mm
Outer sheath, material	PVC
External sheath, color	black RAL 9005
Conductor material	Bare Cu litz wires

Material wire insulation	PVC
Single wire, color	black 1, black 2, green/yellow
Overall twist	3 wires, twisted
Max. conductor resistance	39 Ω/km (at 20 °C)
Insulation resistance	≥ 20 MΩ*km
Nominal voltage, cable	300 V
Test voltage	1200 V
Minimum bending radius, fixed installation	5 x D
Smallest bending radius, fixed installation	24 mm
Flame resistance	DIN VDE 0482
	DIN EN 50265-2-1
Resistance to oil	in accordance with DIN EN 60811-2-1
Ambient temperature (operation)	-40 °C ... 80 °C (cable, fixed installation)
	-5 °C ... 80 °C (Cable, flexible installation)

PVC gray [500]

Dimensional drawing	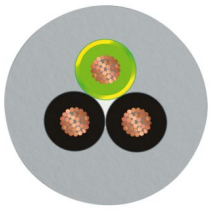
Cable weight	39.2 kg/km
Number of positions	3
Shielded	no
Cable type	PVC gray [500]
	PVC gray 500
Conductor type	Round cable
Conductor structure signal line	16x 0.20 mm
AWG signal line	20
Conductor cross-section	3x 0.5 mm² (Signal line)
Wire diameter incl. insulation	1.5 mm ±0.05 mm (Signal line)
External cable diameter	4.80 mm ±0.2 mm
Outer sheath, material	PVC
External sheath, color	gray RAL 7001
Conductor material	Bare Cu litz wires
Material wire insulation	PVC
Single wire, color	black 1, black 2, green/yellow
Overall twist	Wires twisted in layers
Max. conductor resistance	39 Ω/km (at 20 °C)
Insulation resistance	min. 20 MΩ*km
Nominal voltage, cable	300 V

Test voltage	1200 V
Minimum bending radius, fixed installation	5 x D
Smallest bending radius, fixed installation	24 mm
Flame resistance	DIN EN 50265-2-1
Resistance to oil	in accordance with DIN EN 60811-2-1
Ambient temperature (operation)	-40 °C ... 80 °C (cable, fixed installation)
	-5 °C ... 80 °C (Cable, flexible installation)

PVC, 0.75 mm², black [534]

Dimensional drawing	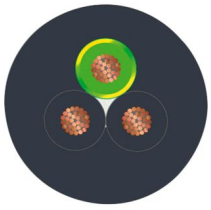
Cable weight	49.1 kg/km
Number of positions	3
Shielded	no
Cable type	PVC, 0.75 mm², black [534]
	PVC, 0.75 mm², black 534
Conductor structure signal line	24x 0.20 mm
AWG signal line	18
Conductor cross-section	3x 0.75 mm²
Wire diameter incl. insulation	1.7 mm ±0.1 mm
External cable diameter	5.30 mm ±0.2 mm
Outer sheath, material	PVC
External sheath, color	black
Conductor material	Bare Cu litz wires
Material wire insulation	PVC
Single wire, color	black 1, black 2, green/yellow
Overall twist	3 wires, twisted
Max. conductor resistance	26 Ω/km (at 20 °C)
Insulation resistance	min. 20 MΩ*km (at 20 °C)
Nominal voltage, cable	300 V
Test voltage	1200 V
Minimum bending radius, fixed installation	5 x D
Smallest bending radius, fixed installation	27 mm
Flame resistance	DIN VDE 0482
	DIN EN 50265-2-1
	in acc. to UL VW1
Resistance to oil	in accordance with DIN EN 60811-2-1
Ambient temperature (operation)	-40 °C ... 80 °C (cable, fixed installation)

	-5 °C ... 80 °C (Cable, flexible installation)

PUR, halogen-free, highly stranded, resistant to welding sparks, gray [800]

Dimensional drawing	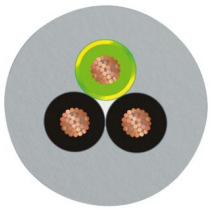
Note	Due to the extremely robust outer sheath, this cable should only be stripped in 5 cm increments.
Cable weight	31 kg/km
UL AWM Style	20549
Number of positions	3
Shielded	no
Cable type	PUR, halogen-free, highly stranded, resistant to welding sparks, gray [800]
	PUR, halogen-free, highly stranded, resistant to welding sparks, gray 800
Conductor structure signal line	28x 0.15 mm
AWG signal line	20
Conductor cross-section	3x 0.5 mm² (Signal line)
Wire diameter incl. insulation	1.5 mm ±0.05 mm (Signal line)
External cable diameter	4.50 mm ±0.2 mm
Outer sheath, material	PUR
External sheath, color	gray RAL 7001
Conductor material	Bare Cu litz wires
Material wire insulation	PP
Single wire, color	black 1, black 2, green/yellow
Overall twist	Wires twisted in layers
Max. conductor resistance	39 Ω/km (at 20 °C)
Insulation resistance	≥ 20 MΩ*km
Nominal voltage, cable	300 V
Test voltage	1200 V
Minimum bending radius, fixed installation	5 x D
Minimum bending radius, flexible installation	10 x D
Smallest bending radius, fixed installation	23 mm
Smallest bending radius, movable installation	45 mm
Dynamic load capacity (bending)	Max. bending cycles: 15000000, Bending radius: 50 mm, Traversing path: 0.9 m, Traversing rate: 5 m/s, Acceleration: 30 m/s²
Dynamic load capacity (torsion)	Torsion: ±360 °/m
Halogen-free	The cable is halogen-free

Flame resistance	in accordance with UL 758/1581 FT2
Resistance to oil	in accordance with DIN EN 60811-2-1
Other resistance	Highly resistant to acids, alkaline solutions and solvents
Special properties	Cable jacket is welding spark-resistant, recyclable, matt, low-adhesion, abrasion-resistant, flame-retardant, and self-extinguishing
	Free from silicone and cadmium
	Free of substances which would hinder coating with paint or varnish
Ambient temperature (operation)	-40 °C ... 80 °C (cable, fixed installation)
	-25 °C ... 80 °C (Cable, flexible installation)

Environmental and real-life conditions

Ambient conditions

Degree of protection	IP65
	IP67
Ambient temperature (operation) (male connector/female connector)	-25 °C ... 90 °C (Plug / socket)
Ambient temperature (operation) (Valve connector)	-20 °C ... 85 °C (Valve connector)

Standards and regulations

M12

Standard designation	M12 connector
Standards/specifications	IEC 61076-2-101

Valve connector

Standard designation	Valve connector
Standards/specifications	EN 175301-803

Drawings

Dimensional drawing

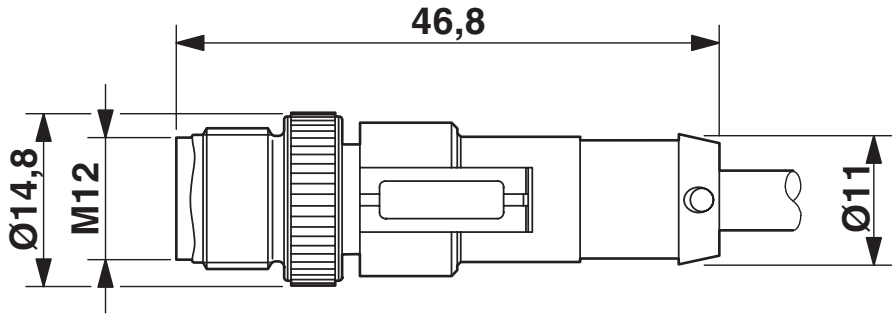

Plug, M12 x 1, straight, shielded

Dimensional drawing

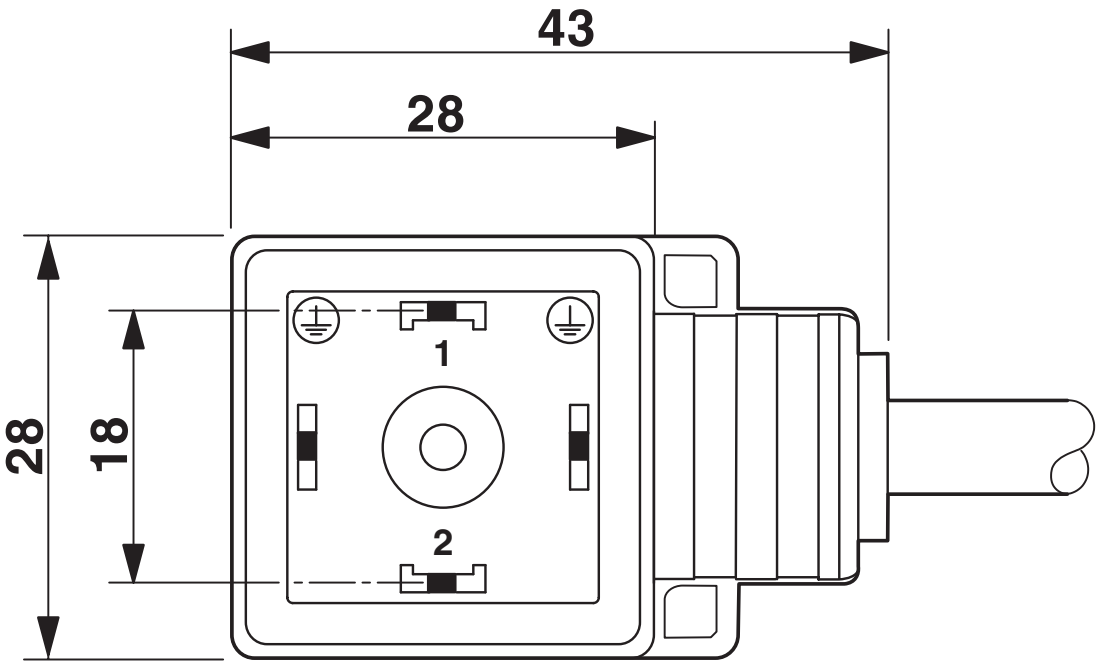

Valve connector, type A

Dimensional drawing

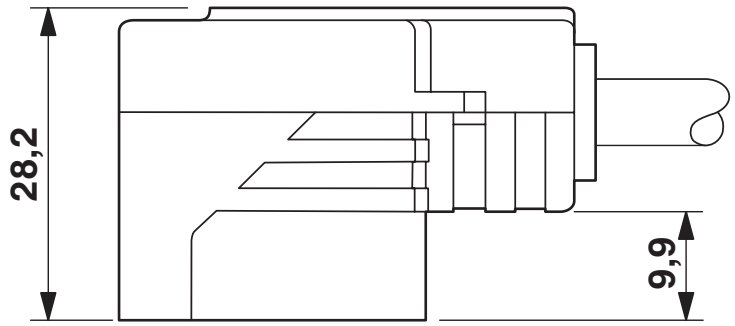

Valve connector, type A, side view

Schematic diagram

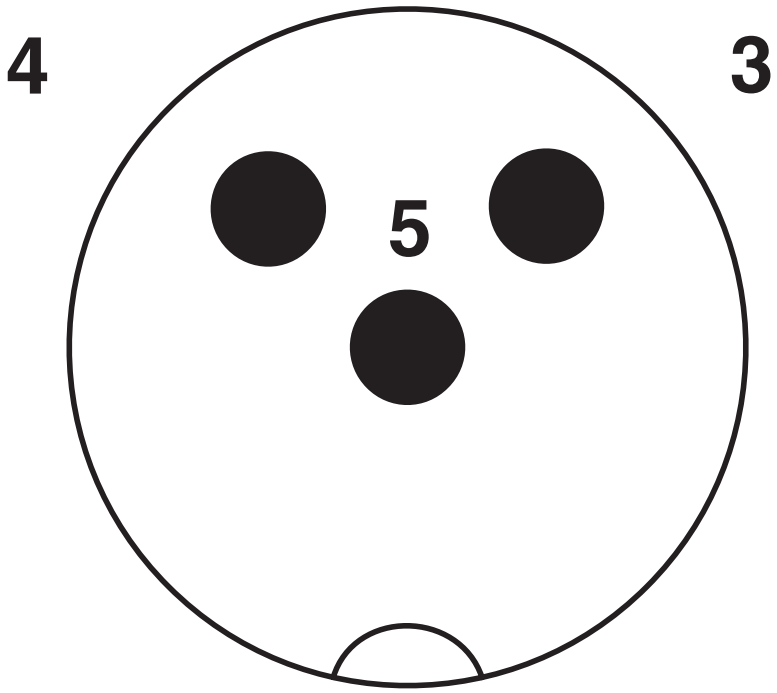

Pin assignment M12 plug, 3-pos., valve connector

Schematic diagram

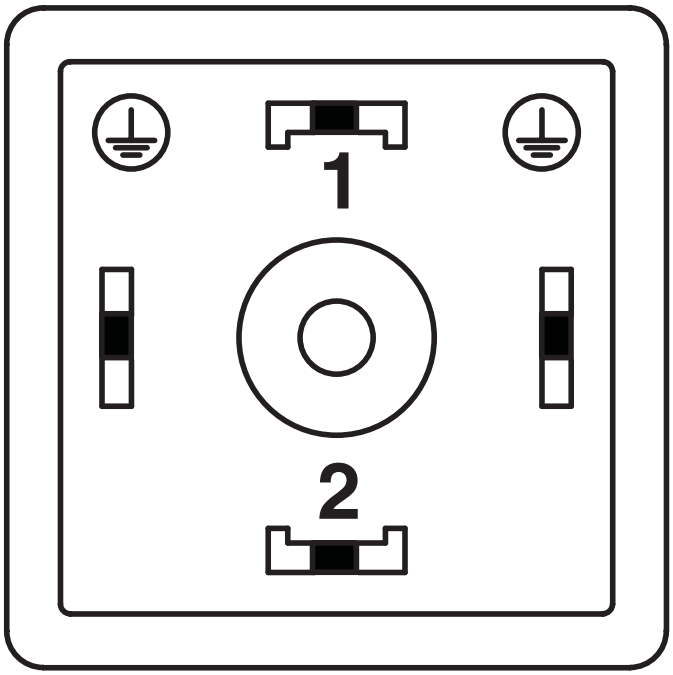

Valve connector pin assignment, type A

Circuit diagram

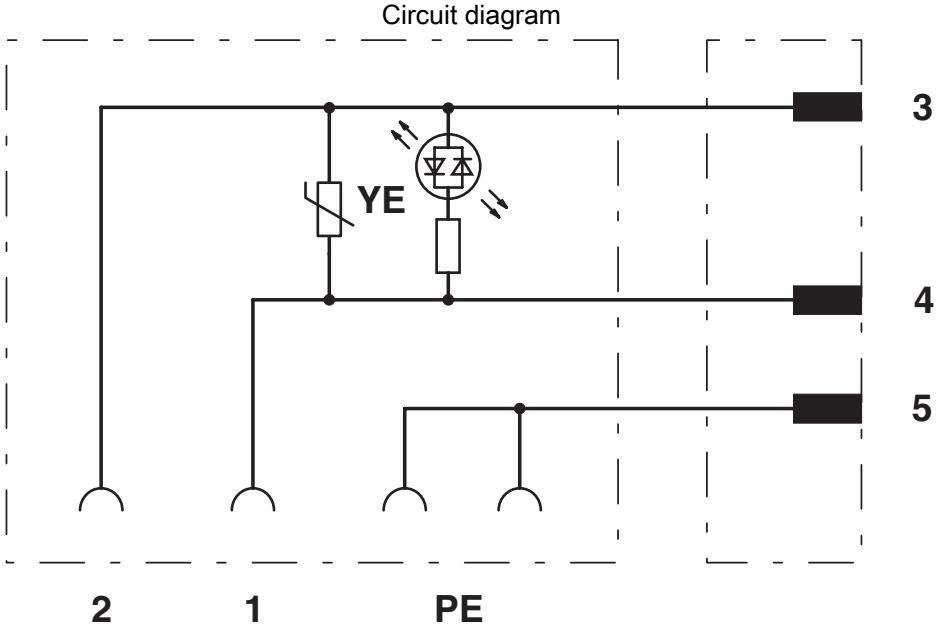

Contact assignment of M12 plug and valve connector

Approvals

To download certificates, visit the product detail page: https://www.phoenixcontact.com/us/products/1400874

CSAus
Approval ID: 13631

	Nominal voltage U_N	Nominal current I_N	Cross section AWG	Cross section mm^2
keine				
	24 V	4 A	-	-

Classifications

ECLASS

ECLASS-13.0	27060312
ECLASS-15.0	27060312

ETIM

ETIM 10.0	EC001855

UNSPSC

UNSPSC 21.0	31251500

Environmental product compliance

EU RoHS

Fulfills EU RoHS substance requirements	Yes, No exemptions

China RoHS

Environment friendly use period (EFUP)	EFUP-E
	No hazardous substances above the limits

EU REACH SVHC

REACH candidate substance (CAS No.)	No substance above 0.1 wt%

Phoenix Contact 2026 © - all rights reserved
https://www.phoenixcontact.com

Phoenix Contact USA
586 Fulling Mill Road
Middletown, PA 17057, United States
(+717) 944-1300
info@phoenixcon.com