# SAC-3P-P12MR/ 1,5-PUR - Sensor/actuator cable

1385626

https://www.phoenixcontact.com/us/products/1385626

Please be informed that the data shown in this PDF document is generated from our online catalog. Please find the complete data in the user documentation. Our general terms of use for downloads are valid.



Sensor/actuator cable, 3-position, PUR halogen-free, black-gray RAL 7021, Plug angled M12 Push Pull, coding: A, on free cable end, cable length: 1.5 m

## Your advantages

- Easy and safe: 100 % electrically tested plug-in components
- Save time, thanks to installation with push-pull fast locking

## Commercial data

| | |
|---|---|
| Item number | 1385626 |
| Packing unit | 1 pc |
| Minimum order quantity | 1 pc |
| Sales key | BF06 |
| Product key | AF1CBC |
| GTIN | 4063151819125 |
| Weight per piece (including packing) | 44.5 g |
| Weight per piece (excluding packing) | 42.738 g |
| Customs tariff number | 85444290 |
| Country of origin | PL |

# Technical data

## Product properties

| | |
|---|---|
| Product type | Sensor/actuator cable |
| Application | Standard |
| Number of positions | 3 |
| No. of cable outlets | 1 |
| Shielded | no |
| Coding | A |

### Insulation characteristics

| | |
|---|---|
| Overvoltage category | II |
| Degree of pollution | 3 |

## Material specifications

| | |
|---|---|
| Material | PK (Pin contact carrier) |
| Flammability rating according to UL 94 | V0 |
| Seal material | FKM |
| Material of grip body | TPU, hardly inflammable, self-extinguishing |
| Contact material | CuSn |
| Contact surface material | Ni/Au |
| Material for screw connection | Brass, nickel-plated |

## Electrical properties

| | |
|---|---|
| Insulation resistance | ≥ 100 MΩ |
| Nominal voltage $U_N$ | 250 V AC |
| | 250 V DC |
| Nominal current $I_N$ | 4 A |

## Mechanical properties

### Mechanical data

| | |
|---|---|
| Insertion/withdrawal cycles | ≥ 100 |

## Signaling

| | |
|---|---|
| Status display | no |
| Status display present | no |

## Connection data

### Conductor connection

| | |
|---|---|
| Tightening torque | M12 push-pull connectors |

## Connector

### Connection 1

| | |
|---|---|
| Type | Plug angled M12 Push Pull |
| Number of positions | 3 |
| Locking type | Push Pull |
| Coding type | A |

Connection 2

| | |
|---|---|
| Type | free cable end |

## Cable/line

| | |
|---|---|
| Cable length | 1.5 m |

PUR halogen-free black [PUR]

| | |
|---|---|
| Dimensional drawing | 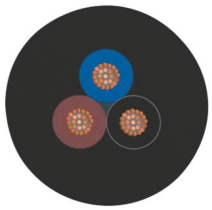 |
| Cable weight | 23 kg/km |
| UL AWM Style | 20549 |
| Number of positions | 3 |
| Shielded | no |
| Cable type | PUR halogen-free black [PUR] |
| Conductor structure signal line | 42x 0.10 mm |
| AWG signal line | 22 |
| Conductor cross-section | 3x 0.34 mm² (Signal line) |
| Wire diameter incl. insulation | 1.27 mm ±0.02 mm (Signal line) |
| External cable diameter | 3.85 mm ±0.15 mm |
| Outer sheath, material | PUR |
| External sheath, color | black-gray RAL 7021 |
| Conductor material | Bare Cu litz wires |
| Material wire insulation | PP |
| Single wire, color | brown, blue, black |
| Thickness, insulation | ≥ 0.21 mm (Core insulation) |
| | approx. 0.50 mm (Outer cable sheath) |
| Overall twist | 3 wires, twisted |
| Max. conductor resistance | max. 58 Ω/km (at 20 °C) |
| Insulation resistance | ≥ 100 GΩ*km (at 20 °C) |
| Nominal voltage, cable | ≤ 300 V |
| Test voltage | ≥ 3000 V |
| Smallest bending radius, fixed installation | 19 mm |
| Smallest bending radius, movable installation | 38 mm |
| Dynamic load capacity (bending) | Max. bending cycles: 10000000, Bending radius: 38 mm, |

| | |
|---|---|
| | Bending radius: 10 x D, Traversing path: 10 m, Traversing rate: 3 m/s, Acceleration: 10 m/s² |
| Dynamic load capacity (torsion) | Torsion: ±180 °/m, Torsion cycles: ≥5000000, Torsional frequency: 35 cycles/min. |
| Halogen-free | in accordance with DIN VDE 0472 part 815 |
| Flame resistance | in accordance with UL 758/1581 FT2 |
| | DIN EN 60332-2-2 (20 s) |
| Resistance to oil | in accordance with DIN EN 60811-2-1 |
| Other resistance | Highly resistant to acids, alkaline solutions and solvents |
| | hydrolysis and microbe resistant |
| | partly UV-resistant (in accordance with DIN EN ISO 4892-2-A) |
| Special properties | Flexible cable conduit capable |
| | Silicone-free |
| | Free of substances which would hinder coating with paint or varnish |
| Ambient temperature (operation) | -40 °C ... 80 °C (cable, fixed installation) |
| | -25 °C ... 80 °C (Cable, flexible installation) |

## Environmental and real-life conditions

### Ambient conditions

| | |
|---|---|
| Degree of protection | IP65 |
| | IP67 |
| Ambient temperature (operation) | -25 °C ... 85 °C (Plug / socket) |

## Standards and regulations

| | |
|---|---|
| Standard designation | M12-Push-Pull |
| Standards/specifications | IEC 61076-2-010 |

## Drawings

Dimensional drawing

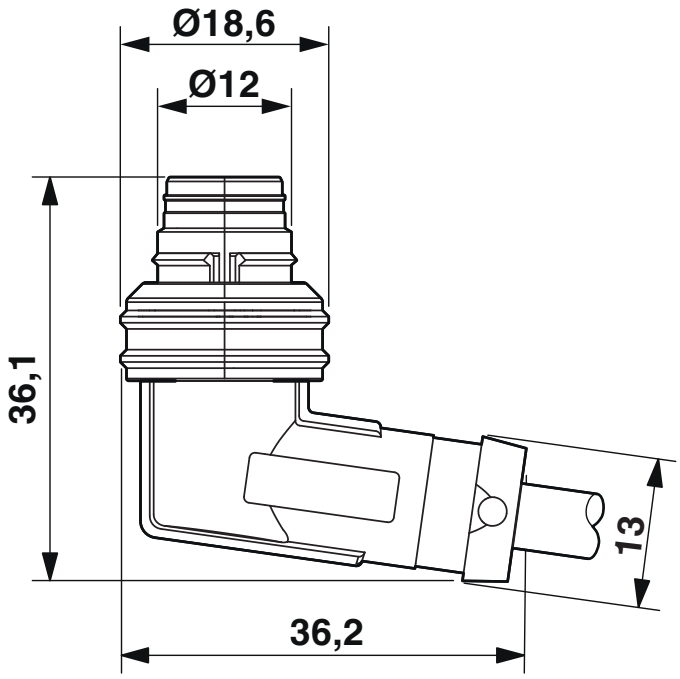


M12 push-pull male connector, angled

Schematic diagram

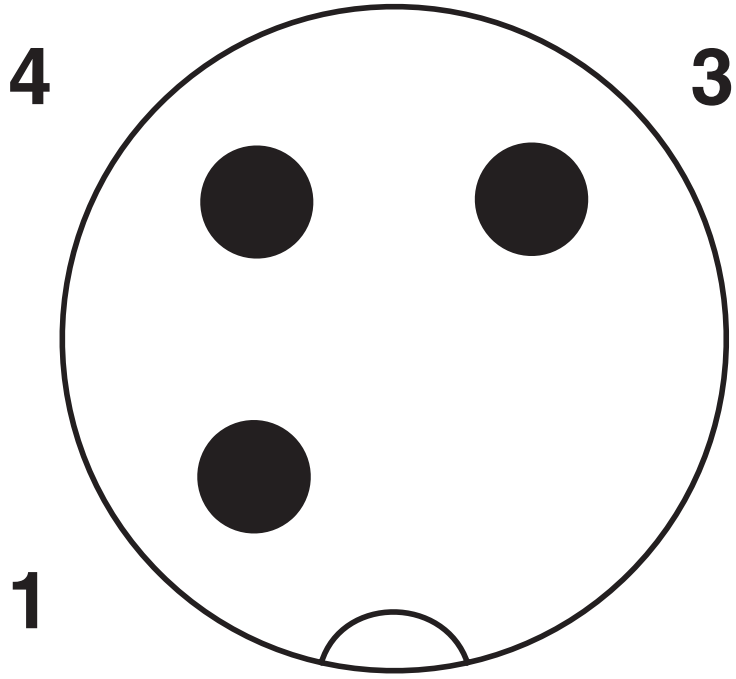


Pin assignment M12 plug, 3-pos., A-coded, view male side

Circuit diagram

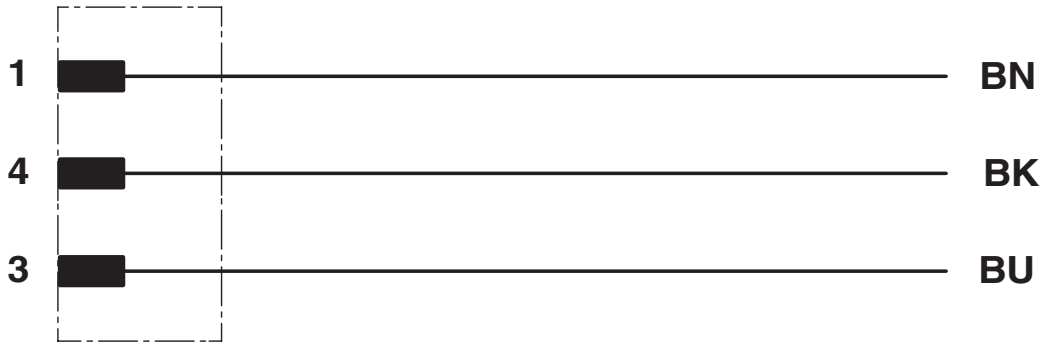


Contact assignment of the M12 plug

## Approvals

To download certificates, visit the product detail page: https://www.phoenixcontact.com/us/products/1385626

**cULus Listed**
Approval ID: E221474

| | Nominal voltage $U_N$ | Nominal current $I_N$ | Cross section AWG | Cross section $mm^2$ |
|---|---|---|---|---|
| keine | | | | |
| | 300 V | 4 A | - 22 | - |

## Classifications

### ECLASS

| | |
|---|---|
| ECLASS-13.0 | 27060311 |
| ECLASS-15.0 | 27060311 |

### ETIM

| | |
|---|---|
| ETIM 10.0 | EC001855 |

### UNSPSC

| | |
|---|---|
| UNSPSC 21.0 | 26121600 |

## Environmental product compliance

EU RoHS

| | |
|---|---|
| Fulfills EU RoHS substance requirements | Yes, No exemptions |

China RoHS

| | |
|---|---|
| Environment friendly use period (EFUP) | EFUP-E |
| | No hazardous substances above the limits |

EU REACH SVHC

| | |
|---|---|
| REACH candidate substance (CAS No.) | No substance above 0.1 wt% |

EF3.1 Climate Change

| | |
|---|---|
| CO2e kg | 0.276 kg CO2e |

Phoenix Contact 2026 © - all rights reserved
https://www.phoenixcontact.com

Phoenix Contact USA
586 Fulling Mill Road
Middletown, PA 17057, United States
(+717) 944-1300
info@phoenixcon.com