HC-B16-BCFD-P-BK - Protective cover

1346539

https://www.phoenixcontact.com/us/products/1346539

Please be informed that the data shown in this PDF document is generated from our online catalog. Please find the complete data in the user documentation. Our general terms of use for downloads are valid.



Protective cover B16, for double locking latch, protective cover material: PC, height: 26.4 mm, seal: no

Commercial data

Item number	1346539
Packing unit	1 pc
Minimum order quantity	1 pc
Sales key	BF66
Product key	AF7AZC
GTIN	4063151660772
Weight per piece (including packing)	26 g
Weight per piece (excluding packing)	22.22 g
Customs tariff number	85389099
Country of origin	CN

Technical data

Notes

General	Protective cover for supporting base element with double locking latch

Product properties

Product type	Protective cover
Housing type	Protective cover
Type	B16
Retaining cord present	yes
Seal present	no

Dimensions

Dimensional drawing	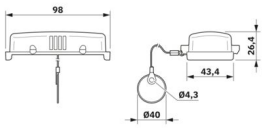
Width	43.4 mm
Height	26.4 mm
Length	98 mm
Diameter Retaining cord eyelet	40 mm

Material specifications

Material Protective cover	PC
Flammability rating according to UL 94	V0
Material, protective cover	PC

Environmental and real-life conditions

Ambient conditions

Degree of protection	IP66
Ambient temperature (operation)	-40 °C ... 125 °C
Resistance to UV radiation	yes

Mounting

Assembly note	Double eyelet for mounting on a cable / below screw head
	Plastic protective cover for short-term protection

Drawings

Dimensional drawing

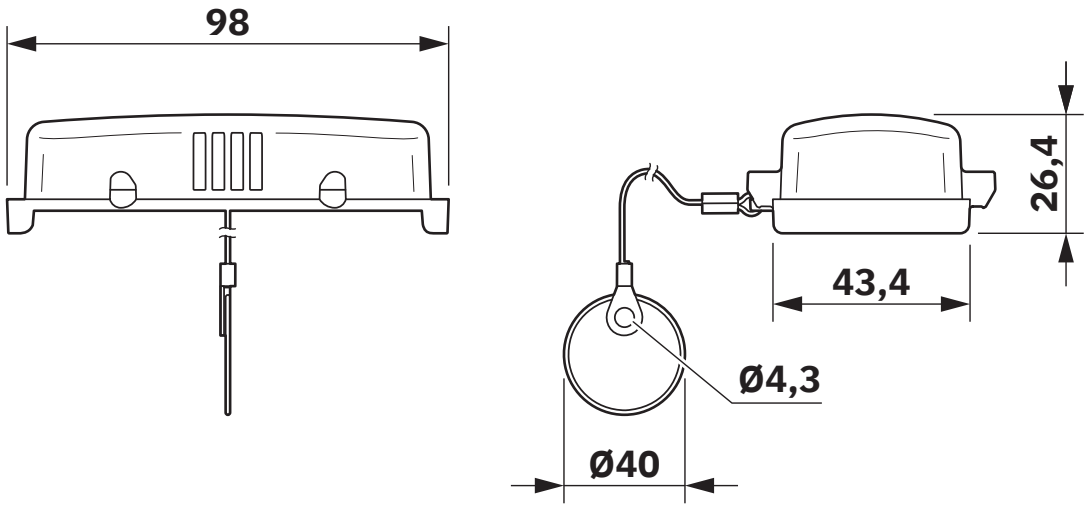

Dimensional drawing

Approvals

To download certificates, visit the product detail page: https://www.phoenixcontact.com/us/products/1346539

DNV
Approval ID: TAE000037S

Classifications

ECLASS

ECLASS-13.0	27440208
ECLASS-15.0	27440208

ETIM

ETIM 10.0	EC002314

UNSPSC

UNSPSC 21.0	39121400

Environmental product compliance

EU RoHS

Fulfills EU RoHS substance requirements	Yes, No exemptions

China RoHS

Environment friendly use period (EFUP)	EFUP-E
	No hazardous substances above the limits

EU REACH SVHC

REACH candidate substance (CAS No.)	No substance above 0.1 wt%

Phoenix Contact 2026 © - all rights reserved
https://www.phoenixcontact.com

Phoenix Contact USA
586 Fulling Mill Road
Middletown, PA 17057, United States
(+717) 944-1300
info@phoenixcon.com