MACX-MR-C-10 - Monitoring relay

1336510

https://www.phoenixcontact.com/us/products/1336510

Please be informed that the data shown in this PDF document is generated from our online catalog. Please find the complete data in the user documentation. Our general terms of use for downloads are valid.

CRA-READY



Current monitoring relay, 24 V AC/DC … 240 V AC/DC wide range power supply, with adjustable threshold values, response delay, and the functions can be selected by configuration.

Commercial data

Item number	1336510
Packing unit	1 pc
Minimum order quantity	1 pc
Sales key	C443
Product key	DK6612
GTIN	4063151637057
Weight per piece (including packing)	208 g
Weight per piece (excluding packing)	195 g
Customs tariff number	85364900
Country of origin	CN

Technical data

Notes

Note on application

Note on application	As things stand now, we are preparing the product so that, as of December 11, 2027, it will comply with the requirements of the EU Cyber Resilience Act (CRA) based on the information currently available regarding the CRA.

Product properties

Product type	Current monitoring relay
Operating mode	Closed circuit or wire break
Mechanical service life	Approx. 1 x 10^7 cycles

Insulation characteristics: Railway standard

Overvoltage category	III
Pollution degree	3

Electrical properties

Rated impulse withstand voltage	6 kV
Service life electrical	approx. 1x 10^5 cycles, resistive load 2000 V A
Maximum power dissipation for nominal condition	15 W
Mains type	1-phase

Railway standard

Rated insulation voltage	600 V

Electrical isolation

Electrical isolation	300 V

Supply

Supply voltage range	24 V AC ... 240 V AC -15 % ... +10 %
	24 V DC ... 240 V DC -25 % ... +30 %
Nominal power consumption	15 VA (1.5 W)
Frequency range	48 Hz ... 400 Hz

Input data

Input name	Measuring input
Measured value	DC, AC sine (40 Hz ... 500 Hz)
Input current range	0 A AC/DC ... 10 A AC/DC
Overload capacity	15 A AC/DC
Input resistance current input	5 mΩ
Frequency range	48 Hz ... 400 Hz
Maximum temperature coefficient	0.05 %/K
Setting range for response delay	0 s ... 99.9 s
	Undercurrent

Function	Overcurrent
	Window
Basic accuracy	1 % (>1 A) , ±10 mA (0…1 A)
Repeat accuracy	0.5 %
Recovery time	200 ms

Output data

Switching

Contact switching type	2 floating changeover contacts
Contact material	$AgSnO_2$
Maximum switching voltage	400 V AC
Interrupting rating (ohmic load) max.	2000 VA (8 A/250 V AC)
Output fuse	8 A (fast-blow)

Connection data

Connection method	Screw connection
Stripping length	10 mm
Conductor cross-section rigid	0.2 mm² ... 2.5 mm²
Conductor cross-section flexible	0.2 mm² ... 2.5 mm²
Conductor cross-section AWG	24 ... 14
Tightening torque	0.5 Nm ... 0.6 Nm (5 lb in ... 7 lb in)

Dimensions

Width	22.5 mm
Height	109 mm
Depth	114 mm

Material specifications

Flammability rating according to UL 94	V0
Housing insulation material	PBT

Environmental and real-life conditions

Ambient conditions

Degree of protection	IP40 (Housing)
	IP20 (Connection terminal blocks)
Ambient temperature (operation)	-25 °C ... 60 °C
Ambient temperature (storage/transport)	-40 °C ... 85 °C
Permissible humidity (operation)	10 % ... 95 %

Approvals

CE

Identification	CE-compliant

UL, USA/Canada

Identification	UL/C-UL Listed UL 508

CCC

Identification	GB/T 14048.5

Electronic devices in rail vehicles

Operating temperature class	OT4
Class of extended operating temperature upon activation	ST2
Temperature change class	H1
Interruption of the power supply/supply changeover	S2
	S3/C1
	C2
Hazard levels	HL1
	HL2
	HL3
Protective coating	PC2
Shock (operation)	Category 1
Vibration (operation)	Class B

EMC data

Electromagnetic compatibility	Conformance with EMC directive
Low Voltage Directive	Conformance with Low Voltage Directive
Noise immunity	EN 61000-6-2

Noise emission

Standards/regulations	EN 61000-6-4

Standards and regulations

Railway standard

Standard designation	EN 50155, GB/T 25119

Mounting

Mounting type	DIN rail mounting
Assembly note	on standard DIN rail NS 35 in accordance with EN 60715
Mounting position	any

Drawings

Schematic diagram

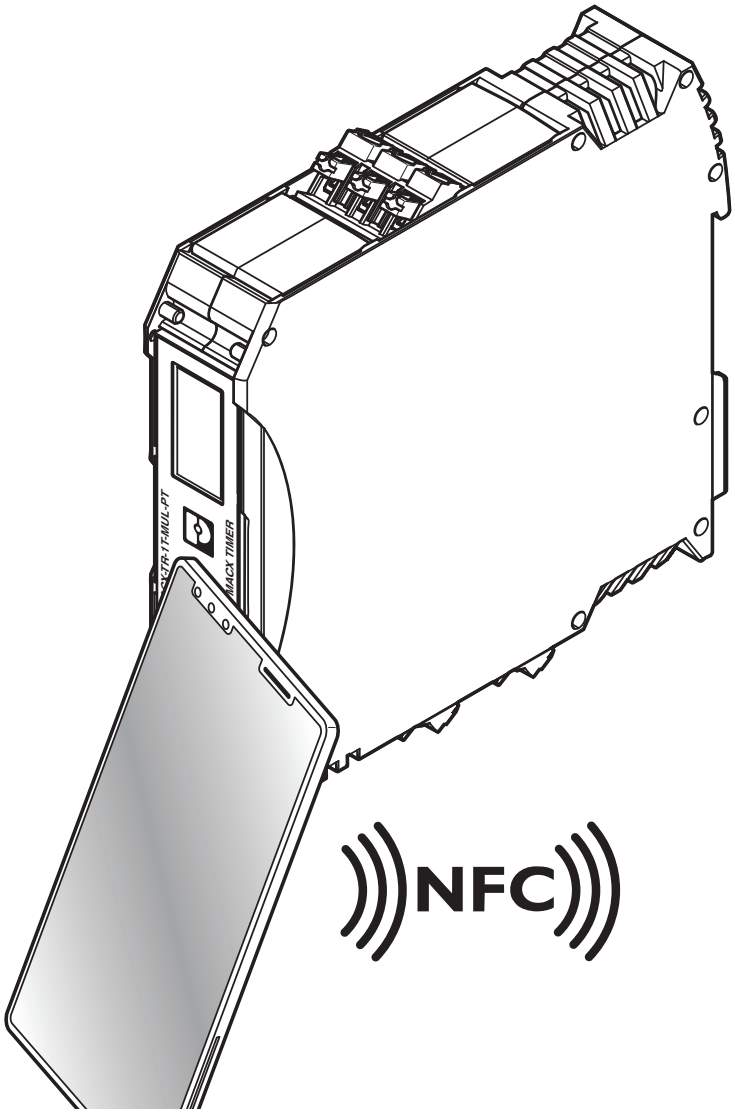

Diagram

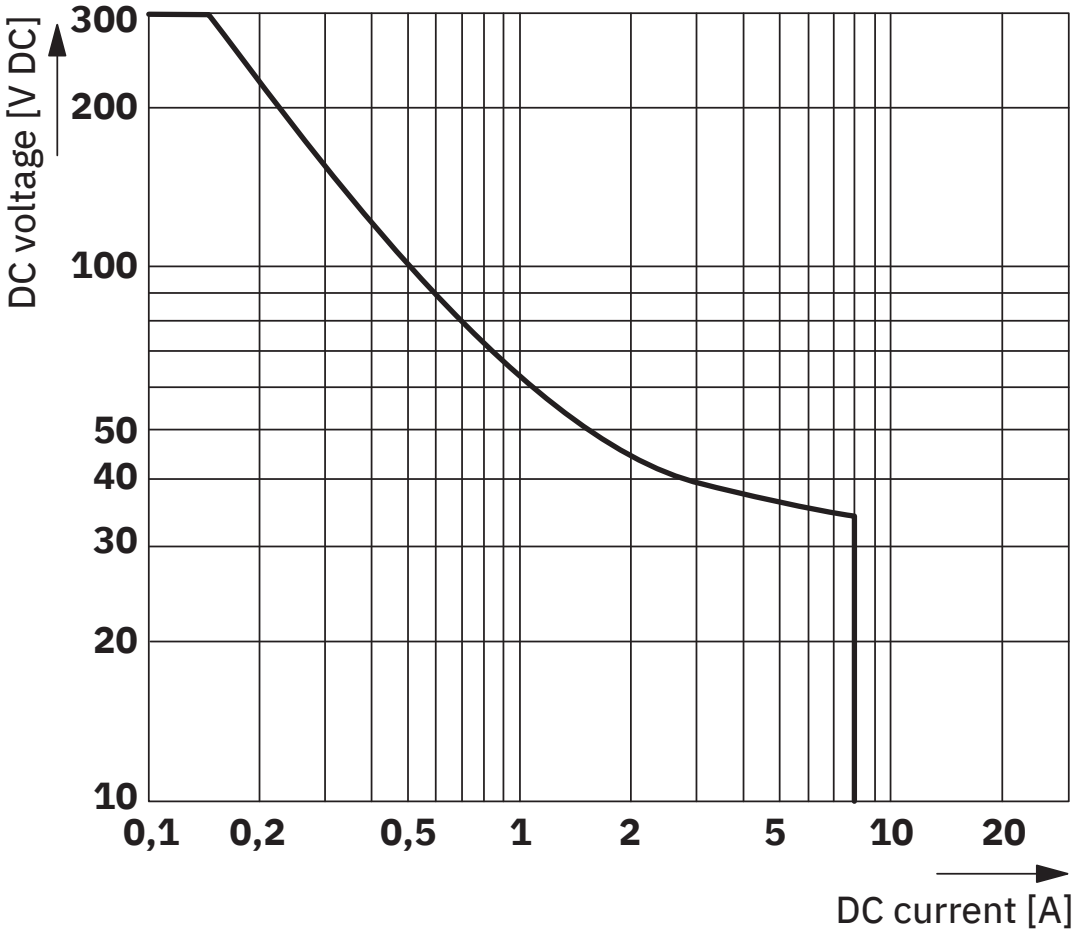

Interrupting rating

Block diagram

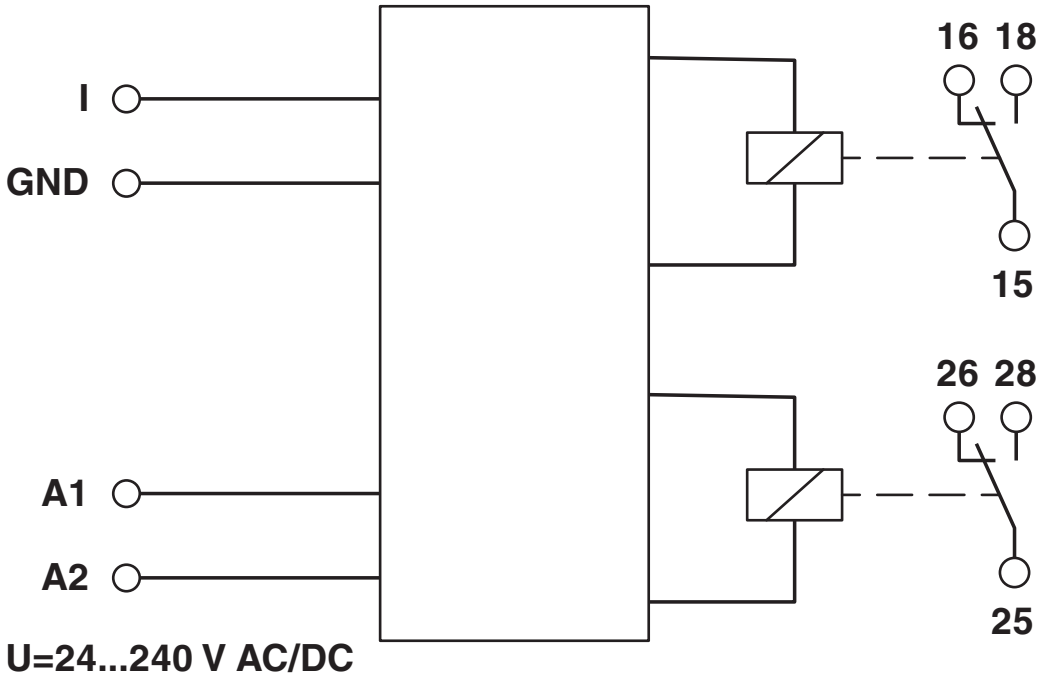

Approvals

To download certificates, visit the product detail page: https://www.phoenixcontact.com/us/products/1336510

CCC
Approval ID: 2024010303656845

cULus Listed
Approval ID: E172140V4S1

Classifications

ECLASS

ECLASS-13.0	27371802
ECLASS-15.0	27371802

ETIM

ETIM 10.0	EC001440

Environmental product compliance

EU RoHS

Fulfills EU RoHS substance requirements	Yes
Exemption	7(a), 7(c)-I

China RoHS

Environment friendly use period (EFUP)	EFUP-50
	An article-related China RoHS declaration table can be found in the download area for the respective article under "Manufacturer declaration". For all articles with EFUP-E, no China RoHS declaration table issued and required.

EU REACH SVHC

REACH candidate substance (CAS No.)	Lead(CAS: 7439-92-1)
SCIP	5b3b8edf-8382-47bc-b4de-a2a5962ab0aa

Phoenix Contact 2026 © - all rights reserved
https://www.phoenixcontact.com

Phoenix Contact USA
586 Fulling Mill Road
Middletown, PA 17057, United States
(+717) 944-1300
info@phoenixcon.com