# SOL-SC-2ST-0-DC-10MPPT-1000EQS - String combiner box (SCB)

1318524

https://www.phoenixcontact.com/us/products/1318524

Please be informed that the data shown in this PDF document is generated from our online catalog. Please find the complete data in the user documentation. Our general terms of use for downloads are valid.



String combiner box (SCB); MPP voltage: 1000 V DC; number of strings: 2; Identical number of input and output strings; number of supported MPP trackers: 10; surge protection: T1 / T2; equipment: without special equipment; type of cable entry: Cable gland

## Product description

The Solarline string combiner boxes (SCBs) are used in both small rooftop systems and large ground-mounted systems. The main tasks of the SCBs are the surge protection of the photovoltaic system, collecting strings (if necessary), and looping through the protective equipotential bonding conductor for the local equipotential bonding.
Further functions are optional and depend on the equipment.

Examples of optional functions include protecting the strings with string fuses and disconnecting the strings via DC switch disconnectors or DC fire department switches.
You can determine the full scope of functions of the SCB from its item designation (see the application note for the type key of the SCB, which can be downloaded in the “Downloads” area).

## Your advantages

- Fast installation and startup
- Standard-compliant switchgear and controlgear assembly, thanks to use of DIN EN 61439
- Application-oriented consultation
- Large portfolio of string combiner boxes in stock

ELEKTROGERÄTE RÜCKNAHME

## Commercial data

| | |
|---|---|
| Item number | 1318524 |
| Packing unit | 1 pc |
| Minimum order quantity | 1 pc |

| | |
|---|---|
| Product key | DTHTDA |
| GTIN | 4063151601577 |
| Weight per piece (including packing) | 15.1 kg |
| Weight per piece (excluding packing) | 14.1 kg |
| Country of origin | DE |

# Technical data

## Notes

Note on connection (strings)

| | |
|---|---|
| Notes on connection | Identical number of input and output strings |

## Product properties

| | |
|---|---|
| Product type | String combiner box (SCB) |
| Design | without special equipment |

Insulation characteristics

| | |
|---|---|
| Protection class | II |

## Electrical properties

General

| | |
|---|---|
| MPP voltage $U_n$ | max. 1000 V DC |
| Open-circuit voltage $U_{OC}$ | max. 1100 V DC |
| Current per string $I_{max}$ | max. 20 A |
| Total current per MPP tracker | max. 40 A |

Surge protection

| | |
|---|---|
| EN type | T1 / T2 |
| IEC test classification | T1 / T2 |
| Protection level $U_p$ | ≤ 3.5 kV |
| Total discharge current $I_{Total}$ (10/350) µs | 5 kA |
| Total discharge current $I_{Total}$ (8/20) µs | 40 kA |

## Input data

| | |
|---|---|
| Number of inputs (Strings) | 2 (Per MPP tracker) |
| Number of supported MPP trackers | 10 |

## Output data

DC

| | |
|---|---|
| Number of outputs (MPP tracker) | 10 |
| Number of outputs (± per MPP tracker) | 2 (Per MPP tracker) |

## Connection data

DC input

| | |
|---|---|
| Type of cable entry | Cable gland |
| Connection method | Push-in connection |
| Cable cross-section range | 4 mm² ... 6 mm² |

| | |
|---|---|
| External cable diameter | 5 mm ... 7 mm |

Lightning protection equipotential bonding & ground conductor

| | |
|---|---|
| Type of cable entry | Cable gland |
| Connection method | Push-in connection |
| Cable cross section | 2x 16 mm² |
| External cable diameter | 2x 6 mm ... 13 mm |

DC output

| | |
|---|---|
| Type of cable entry | Cable gland |
| Connection method | Push-in connection |
| Cable cross-section range | 4 mm² ... 6 mm² |
| External cable diameter | 5 mm ... 7 mm |

## Dimensions

Housing

| | |
|---|---|
| Width | 600 mm |
| Height | 400 mm |
| Depth | 230 mm |

## Material specifications

| | |
|---|---|
| Material Housing | Polyester fiberglass reinforced |
| Material Cover/door | Polyester fiberglass reinforced |

## Environmental and real-life conditions

Ambient conditions

| | |
|---|---|
| Degree of protection | IP65 |
| Ambient temperature (operation) | -20 °C ... 50 °C |

## Standards and regulations

| | |
|---|---|
| Standard designation | Low-voltage switchgear and controlgear assemblies - Part 2: Power switchgear and controlgear assemblies |
| Standards/specifications | EN 61439-2 |

## Drawings

Connection diagram

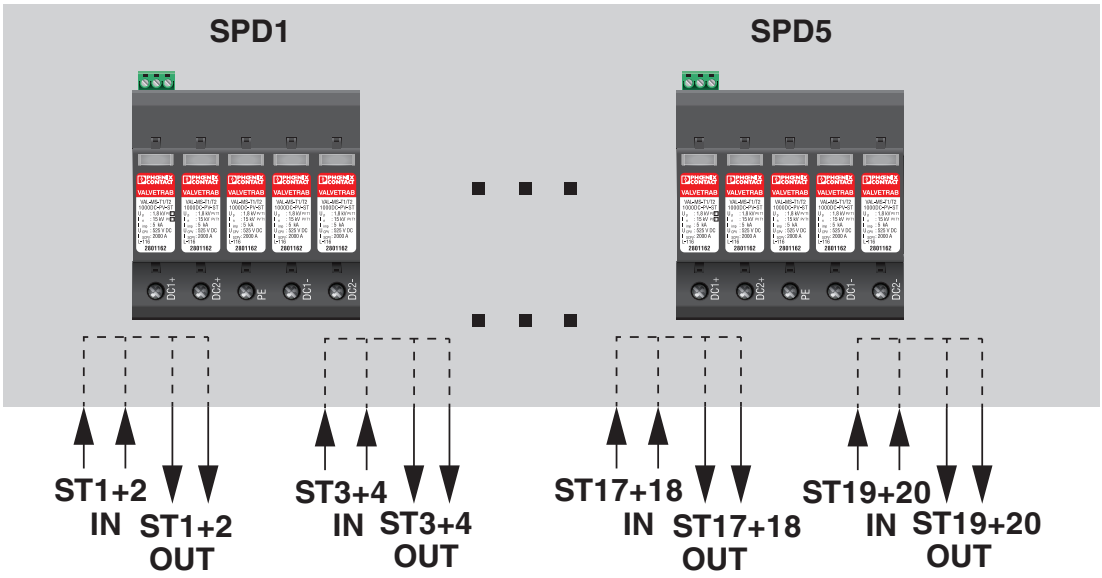


Schematic application drawing

Schematic diagram

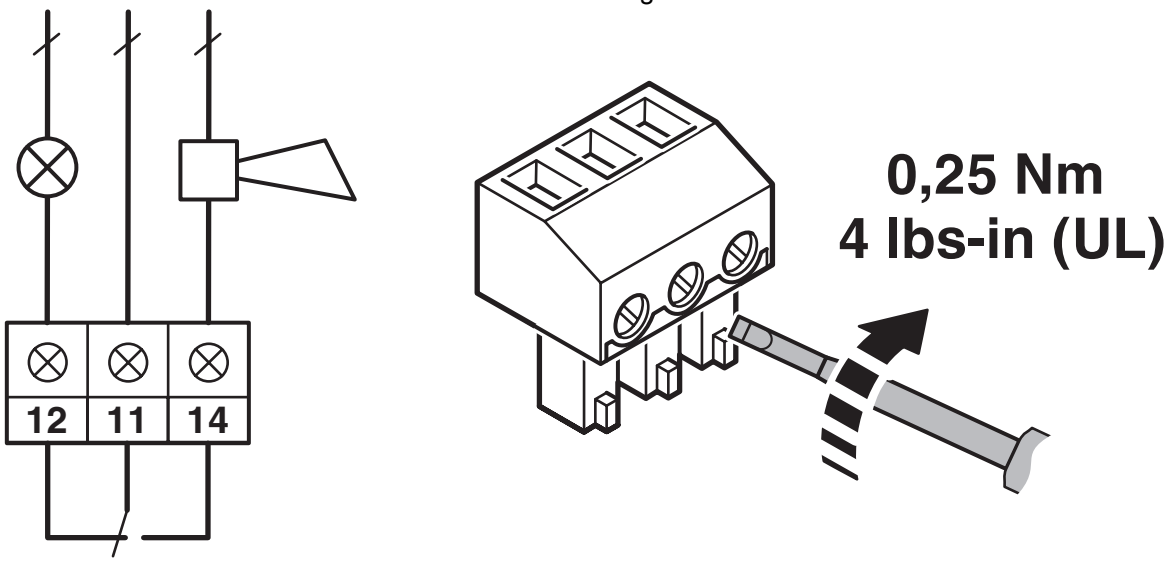


Connection of the remote indication contact on the surge protection

## Classifications

### ECLASS

| | |
|---|---|
| ECLASS-13.0 | 27171490 |
| ECLASS-15.0 | 22570203 |

### ETIM

| | |
|---|---|
| ETIM 10.0 | EC003857 |

### UNSPSC

| | |
|---|---|
| UNSPSC 21.0 | 39121100 |

## Environmental product compliance

EU RoHS

| | |
|---|---|
| Fulfills EU RoHS substance requirements | Yes, No exemptions |

EU REACH SVHC

| | |
|---|---|
| REACH candidate substance (CAS No.) | No substance above 0.1 wt% |

Phoenix Contact 2026 © - all rights reserved
https://www.phoenixcontact.com

Phoenix Contact USA
586 Fulling Mill Road
Middletown, PA 17057, United States
(+717) 944-1300
info@phoenixcon.com