BC 107,6-KIT-U22-7035+4PTDA9 - Housing set

1311010

https://www.phoenixcontact.com/us/products/1311010

Please be informed that the data shown in this PDF document is generated from our online catalog. Please find the complete data in the user documentation. Our general terms of use for downloads are valid.



DIN rail housing for use in distribution boards in accordance with DIN 43880, for mounting on a DIN rail, with transparent hinged cover, color: black (similar RAL 9005), width: 107.6 mm, height: 89.7 mm, depth: 60.7 mm, incl. 4 PCB terminal blocks, 9-pos., Push-in, for 2.5 mm^2, nominal current: 24 A, 400 V, PCB surface: 8300 mm^2

Commercial data

Item number	1311010
Packing unit	1 pc
Minimum order quantity	1 pc
Sales key	AC10
Product key	ACHBAK
GTIN	4063151602192
Weight per piece (including packing)	165 g
Weight per piece (excluding packing)	120.72 g
Customs tariff number	85369010
Country of origin	DE

Set consists of

PTDA 2,5/ 9-5,0 - PCB terminal block

1725393

https://www.phoenixcontact.com/us/products/1725393

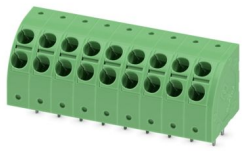

PCB terminal block, nominal current: 24 A, rated voltage (III/2): 400 V, nominal cross section: 2.5 mm^2, number of potentials: 9, number of rows: 1, number of positions per row: 9, product range: PTDA 2,5/, pitch: 5 mm, connection method: Push-in spring connection, mounting: Wave soldering, conductor/PCB connection direction: 45 °, color: green, Pin layout: Linear pinning, Solder pin [P]: 3.5 mm, number of solder pins per potential: 2, type of packaging: packed in cardboard

Technical data

Notes

Assembly note	Please observe the assembly instructions available in the download area.
General	The PCB surface specification is for orientation purposes and is based on a basic PCB. The housing can also accommodate several PCBs.

Product properties

Product type	Stackable housing set
Housing type	DIN rail housing for use in distribution boards in accordance with DIN 43880
Housing type	Modular building installation housings
Housing series	BC
Product family	BC 107,6..
Number of positions	36
Max. number of positions	36 (pitch: 5 mm)
Ventilation openings present	yes
Anzahl der Etagen Housing (Makro)	1 (Both sides)

Dimensions

Dimensional drawing	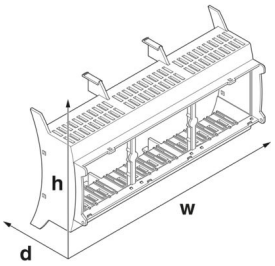
Width	107.6 mm
Height	89.7 mm
Depth	60.7 mm
Depth from top edge of DIN rail	54.7 mm
Horizontal pitch	6 HP
Dimensions	81.54 mm x 107.3 mm (PCB dimensions)

PCB design

PCB thickness	1.4 mm ... 1.8 mm

Material specifications

Color (Lower housing part)	black (RAL 9005)
Color (Upper housing part)	light gray (RAL 7035)
Color (Housing cover)	transparent
Material	PC

Flammability rating according to UL 94	V0
Insulating material	Polycarbonat

Environmental and real-life conditions

Ambient conditions

Max. IP code to attain	IP20
Ambient temperature (operation)	-40 °C ... 105 °C (depending on power dissipation)
Ambient temperature (storage/transport)	-40 °C ... 70 °C
Ambient temperature (assembly)	-5 °C ... 100 °C
Relative humidity (storage/transport)	95 %

PCB data

Number of PCB holders	9
Type of PCB mount	Latching
Total PCB surface	8300 mm²
Thickness of the PCB	1.4 mm ... 1.8 mm

Mounting

Mounting type	DIN rail mounting/panel mounting

Packaging specifications

Type of packaging	packed in cardboard
Outer packaging type	Carton

Drawings

Dimensional drawing

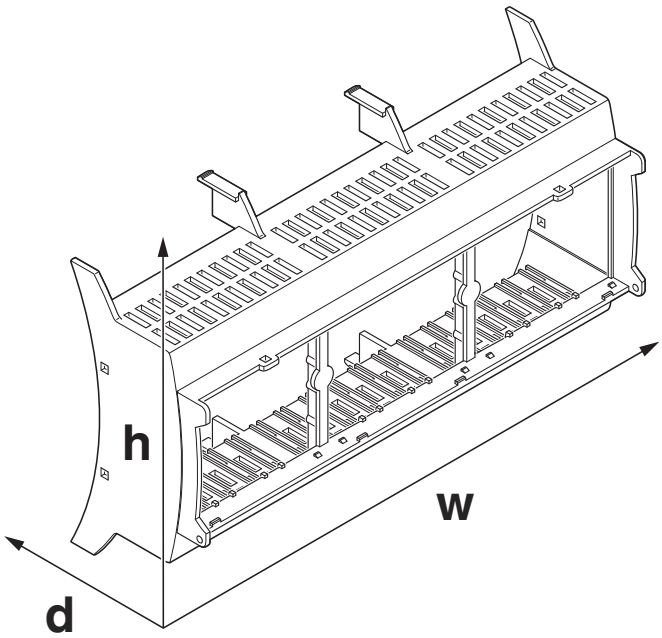

Schematic figure for illustrating the item dimensions. The figure is not of the desired product. For further details, refer to the product drawings in the “Downloads” tab.

Classifications

ECLASS

ECLASS-13.0	27190301
ECLASS-15.0	27190301

ETIM

ETIM 10.0	EC001031

UNSPSC

UNSPSC 21.0	31261500

Environmental product compliance

EU RoHS

Fulfills EU RoHS substance requirements	Yes, No exemptions

China RoHS

Environment friendly use period (EFUP)	EFUP-E
	No hazardous substances above the limits

EU REACH SVHC

REACH candidate substance (CAS No.)	No substance above 0.1 wt%

EF3.1 Climate Change

CO2e kg	0.936 kg CO2e

Phoenix Contact 2026 © - all rights reserved
https://www.phoenixcontact.com

Phoenix Contact USA
586 Fulling Mill Road
Middletown, PA 17057, United States
(+717) 944-1300
info@phoenixcon.com