PRC 20/5-C1-FT25-FS2,5 - Device connector front mounting

1308652

https://www.phoenixcontact.com/us/products/1308652

Please be informed that the data shown in this PDF document is generated from our online catalog. Please find the complete data in the user documentation. Our general terms of use for downloads are valid.



Device connector front mounting, Range of articles: PRC 20, color: black/red, number of positions: 5, min. conductor cross-section: 0.5 mm^2, max. conductor cross-section: 2.5 mm^2, rated voltage: 400 V, rated current: 20 A, Connection method: Screw connection, For assembly notes, please refer to the packing slip, scope: AC

Your advantages

- More space on the device front with current transmission up to 20 A in a minimum amount of space
- Duo-Unlock technology for greater flexibility during installation and maintenance
- Reliable use under extreme ambient conditions with high degrees of protection and impact resistance
- Simple handling with proven crimp or screw connection technology
- Mechanical and color coding for quick and error-free startup

Commercial data

Item number	1308652
Packing unit	1 pc
Minimum order quantity	1 pc
Sales key	AB03
Product key	ABLHBA
GTIN	4063151558673
Weight per piece (including packing)	45.5 g
Weight per piece (excluding packing)	33.627 g
Customs tariff number	85366990
Country of origin	PL

Technical data

Notes

Note on application	For assembly notes, please refer to the packing slip

Product properties

Product type	Panel feed-through
Product family	PRC 20
Area of application	AC
Number of positions	5
Connection profile	4+PE
Coding	5-C1

Insulation characteristics

Protection class	II (plastic housing)

Connection data

Connection technology

Connection method	Screw connection

Dimensions

Dimensional drawing	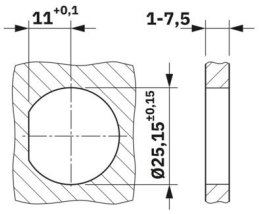
Width	34 mm
Height	38.4 mm
Length	52 mm

Electrical properties

Rated voltage	400 V (III/2) in accordance with IEC 61984
	400 V AC (III/2) in accordance with IEC 61535
	600 V AC / DC (III/2) in accordance with UL 2238 / UL 2237
	500 V DC (III/2) in accordance with IEC 61535
Rated current	20 A (With 2.5 mm² conductor cross-section in accordance with IEC 61984)
	20 A (With 2.5 mm² conductor cross-section in accordance with IEC 61535)
	20 A (With 2.5 mm²/AWG 14, in accordance with UL 2238)
	20 A (With 2.5 mm²/AWG 14, in accordance with UL 2237)

Mechanical properties

Mechanical data

Insertion/withdrawal cycles	500 (Test specification: IEC 60512-13-2)

Material specifications

Color (Housing)	black (RAL 9005)
Material Housing	PPE
Material Contact carrier	PPE
Material Contact	CuZn (Contact material, Pb < 0.1)
Material Cable gland	PPE (Nut)
Material Seal	EPDM (Cable seal)
	EPDM (Flat gasket)
Flammability rating according to UL 94	V0

Cable/line

Single wire, cross section	0.5 mm² 2.5 mm²
Halogen-free	yes (in accordance with IEC 61249-2-21:2003- 11 Cl.3.1)

Environmental and real-life conditions

Ambient conditions

Degree of protection	IP66
	IP68 (2 m / 2 h)
	IP69
Category of shock impact	IK08 (-25°C)
Ambient temperature (operation)	-40 °C ... 85 °C (observe derating)
Ambient temperature (storage/transport)	-40 °C ... 75 °C
Ambient temperature (assembly)	-5 °C ... 85 °C

Standards and regulations

Standards/specifications	IEC 61984:2008
	IEC 61535:2019
	UL 2238
	UL 2237

Drawings

Dimensional drawing

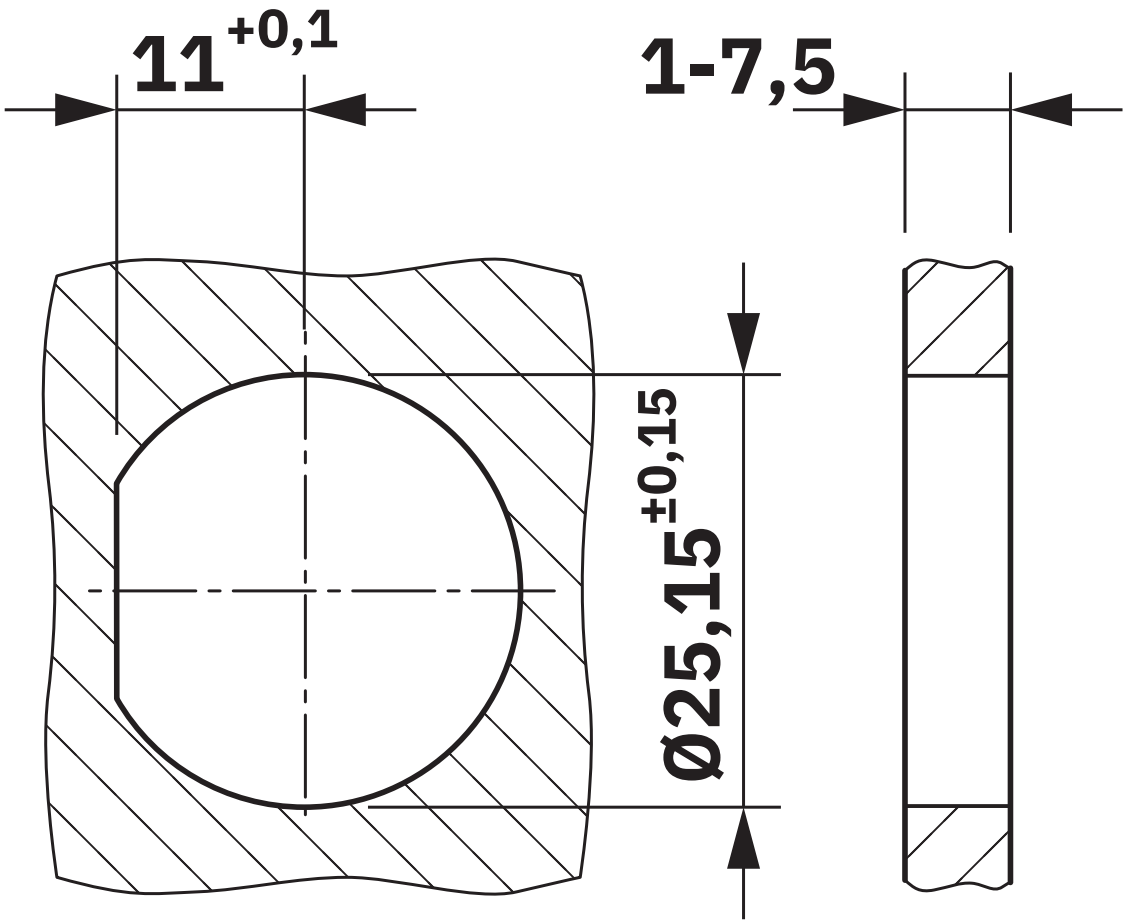

Diagram

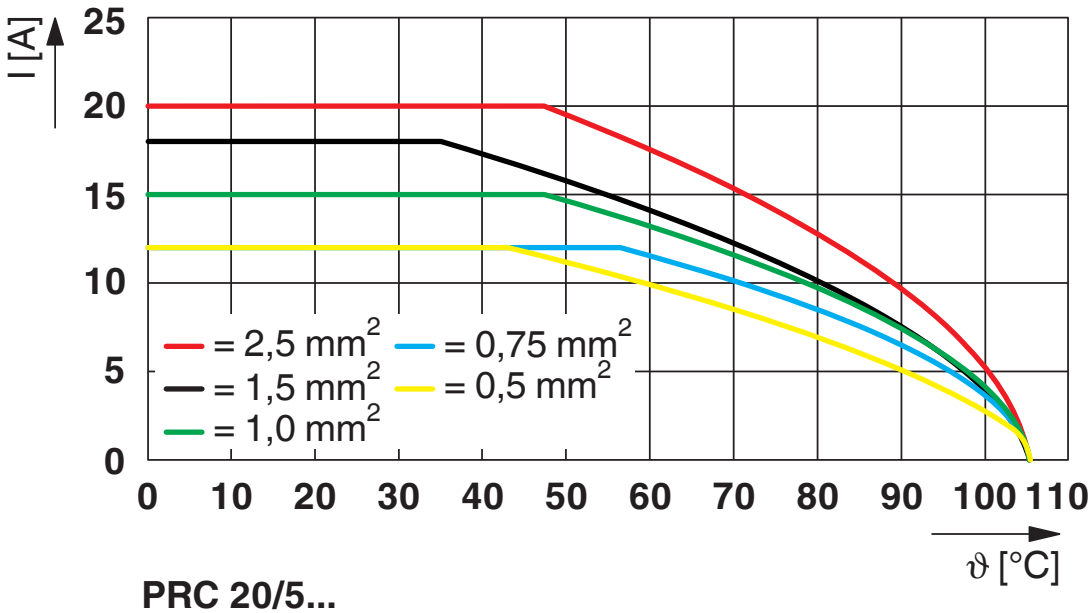

PRC 20/5...

IEC 60512-5-2 / 4 conductors

Derating

Diagram

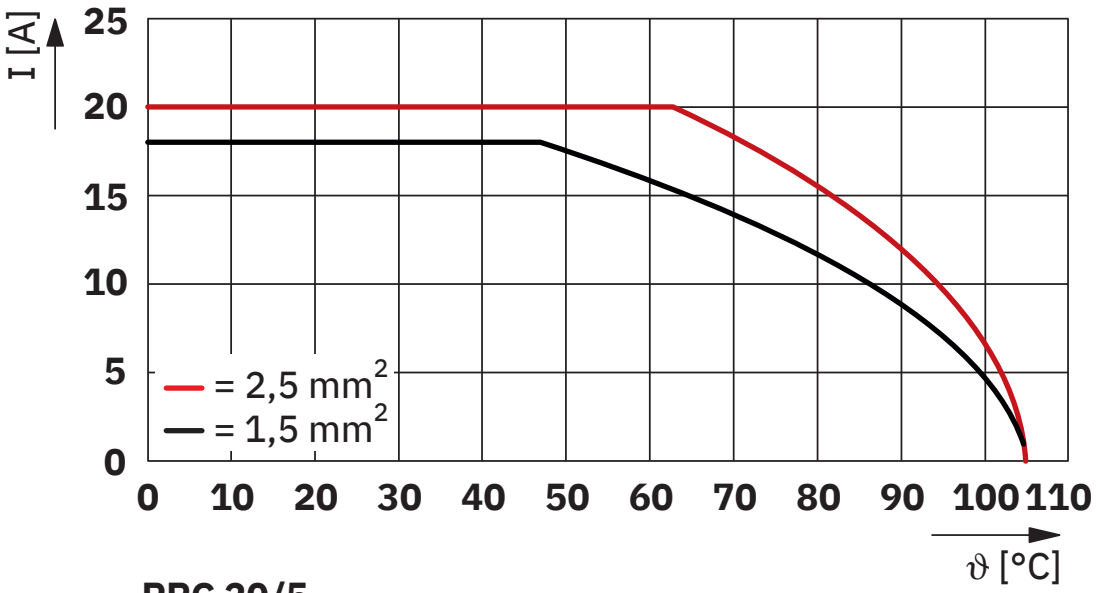

PRC 20/5...

IEC 61535 / 3 conductors

Derating

Classifications

ECLASS

ECLASS-13.0	27440602
ECLASS-15.0	27440602

ETIM

ETIM 10.0	EC002566

UNSPSC

UNSPSC 21.0	39121400

Environmental product compliance

EU RoHS

Fulfills EU RoHS substance requirements	Yes, No exemptions

China RoHS

Environment friendly use period (EFUP)	EFUP-E
	No hazardous substances above the limits

EU REACH SVHC

REACH candidate substance (CAS No.)	Triphenyl phosphate(CAS: 115-86-6)
SCIP	a1277308-f03c-43b3-b408-799b30cb8777

EF3.1 Climate Change

CO2e kg	0.721 kg CO2e

Phoenix Contact 2026 © - all rights reserved
https://www.phoenixcontact.com

Phoenix Contact USA
586 Fulling Mill Road
Middletown, PA 17057, United States
(+717) 944-1300
info@phoenixcon.com