PSR-ME20-3NO-1NC-24DC-SC - Safety relays

1301402

https://www.phoenixcontact.com/us/products/1301402

Please be informed that the data shown in this PDF document is generated from our online catalog. Please find the complete data in the user documentation. Our general terms of use for downloads are valid.



Safety relay for emergency stop, safety doors, and light grids up to SIL 3, Cat. 4, PL e, 1- or 2-channel operation, automatic or manual, monitored start, 3 enabling current paths, 1 signaling current path, U_S = 24 V DC, plug-in screw terminal block

Your advantages

- Up to Cat. 3/PL d in acc. with EN ISO 13849-1, SIL 2 in acc. with EN IEC 62061, SIL 2 in acc. with IEC 61508
- 3 enabling current paths, 1 signaling current path
- 1- and 2-channel control
- Manually monitored and automatic activation

ELEKTROGERÄTE RÜCKNAHME

Commercial data

Item number	1301402
Packing unit	1 pc
Minimum order quantity	1 pc
Sales key	DN01
Product key	DN1112
GTIN	4063151545338
Weight per piece (including packing)	176.6 g
Weight per piece (excluding packing)	156.22 g
Customs tariff number	85371098
Country of origin	DE

Technical data

Notes

Note on application

Note on application	Only for industrial use

Product properties

Product type	Safety relays
Product family	PSRclassic
Application	Emergency stop
	Safety door
	Light grid
Set comprises	1301404 PSR-ME20-3NO-1NC-24DC-SC-SET35
Control	1 and 2 channel
Mechanical service life	approx. 10^7 cycles
Relay type	Electromechanical relay with force-guided contacts in accordance with IEC/EN 61810-3

Insulation characteristics

Overvoltage category	II, III (See the section “Insulation coordination”)
Degree of pollution	2

Times

Typical response time	200 ms (automatic start)
	200 ms (manual, monitored start)
Typ. starting time with U_s	200 ms (when controlled via A1)
Typical release time	25 ms (on demand via the sensor circuit)
	60 ms (on demand via A1)
Restart time	< 1 s (Boot time)
Recovery time	< 500 ms (following demand of the safety function)

Electrical properties

Maximum power dissipation for nominal condition	16.6 W (U_S = 26.4 V, I_L^2 = 72 A², $P_{Total\ max}$ = 2.2 W + 14.4 W)
Nominal operating mode	100% operating factor
Rated insulation voltage	250 V
Rated surge voltage/insulation	See data sheet, section “Insulation coordination”.

Supply

Designation	A1/A2
Rated control circuit supply voltage U_S	24 V DC -15 % / +10 %
Rated control supply current I_S	typ. 70 mA (at U_S)
Power consumption at U_S	typ. 1.68 W
Inrush current	< 5.2 A (typ. with U_S, Δt = 2 ms)
Filter time	5 ms (in the event of voltage dips at U_s)
Protective circuit	Serial protection against polarity reversal

	Suppressor diode

Input data

General

Rated control supply current I_S	typ. 70 mA (at U_S)

Digital: Sensor circuit (S10, S12, S22)

Description of the input	safety-related sensor inputs
Number of inputs	3
Input voltage range "0" signal	0 V DC ... 5 V DC (S10, S12)
Input voltage range "1" signal	20.4 V ... 26.4 V
Input current range "0" signal	0 mA ... 2 mA
Inrush current	< 100 mA (typ. with U_S at S10/S12)
	> -100 mA (typ. with U_S at S22)
Filter time	1 ms (Test pulse width of low test pulses)
	1 s (Test pulse rate for low test pulse)
	No brightness test pulses / high test pulses permitted.
Concurrence	∞
Max. permissible overall conductor resistance	50 Ω
Protective circuit	Suppressor diode
Current consumption	38 mA (typ. with U_S at S10/S12)
	-38 mA (typ. with U_S at S22)

Digital: Start circuit (S34, S35)

Description of the input	non-safety-related
Number of inputs	2
Input voltage range "1" signal	20.4 V ... 26.4 V
Inrush current	< 7 mA (typ. with U_S at S34)
	< 8 mA (typ. with U_S at S35)
Filter time	No test pulses permitted
Max. permissible overall conductor resistance	50 Ω
Protective circuit	Suppressor diode
Current consumption	2 mA (typ. with U_S at S34)
	3 mA (typ. with U_S at S35)

Output data

Relay: Enabling current paths (13/14, 23/24, 33/34)

Output description	2 N/O contacts each in series, safety-related, floating
Number of outputs	3
Contact switching type	3 enabling current paths
Contact material	$AgSnO_2$
Switching voltage	min. 10 V AC/DC
	max. 250 V AC/DC
Switching power	min. 100 mW

Inrush current	min. 10 mA
	max. 6 A
Switching capacity	5 A (AC15)
	6 A (DC13)
Limiting continuous current	6 A (Observe derating and load limit curve)
Sq. Total current	72 A^2 (observe derating)
Switching frequency	max. 0.5 Hz
Mechanical service life	10x 10^6 cycles
Output fuse	10 A gL/gG
	4 A gL/gG (for low-demand applications)

Relay: Signaling current path (41/42)

Output description	2 N/C contacts parallel, non-safety-related, floating
Number of outputs	1
Contact switching type	2 NC parallel
Contact material	$AgSnO_2$
Switching voltage	min. 10 V AC/DC
	max. 250 V AC/DC
Switching power	min. 100 mW
Inrush current	min. 10 mA
	max. 6 A
Switching capacity	3 A (AC15)
	2 A (DC13)
Limiting continuous current	6 A
Sq. Total current	36 A^2
Switching frequency	max. 0.5 Hz
Mechanical service life	10x 10^6 cycles
Output fuse	6 A gL/gG

Connection data

Connection technology

pluggable	yes

Conductor connection

Connection method	Screw connection
Conductor cross-section rigid	0.2 mm² ... 2.5 mm²
Conductor cross-section flexible	0.2 mm² ... 2.5 mm²
Conductor cross-section AWG	24 ... 12
Stripping length	7 mm
Screw thread	M3
Tightening torque	0.5 Nm ... 0.6 Nm

Signaling

Status display	2 x LED (green)
Operating voltage display	1 x LED (green)

Dimensions

Width	22.5 mm
Height	112.2 mm
Depth	114.5 mm

Material specifications

Color (Housing)	traffic gray B (RAL 7043)
Housing material	PA

Characteristics

Safety data

Stop category (EN 60204-1)	0

Safety data: EN ISO 13849

Performance level (PL)	e

Safety data: IEC 61508 - High demand

Safety Integrity Level (SIL)	3

Safety data: IEC 61508 - Low demand

Safety Integrity Level (SIL)	3

Safety data: EN IEC 62061

Safety Integrity Level (SIL)	3

Environmental and real-life conditions

Ambient conditions

Degree of protection	IP20
Min. degree of protection of inst. location	IP54
Ambient temperature (operation)	-20 °C ... 55 °C (observe derating)
Ambient temperature (storage/transport)	-40 °C ... 70 °C
Maximum altitude	≤ 2000 m (Above sea level)
Max. permissible humidity (storage/transport)	75 % (on average, 85% infrequently, non-condensing)
Max. permissible relative humidity (operation)	75 % (on average, 85% infrequently, non-condensing)
Shock	15g
Vibration (operation)	10 Hz ... 150 Hz, 2g

Approvals

CE

Identification	CE-compliant

Mounting

Mounting type	DIN rail mounting
Assembly note	See derating curve

Mounting position	vertical or horizontal

Drawings

Circuit diagram

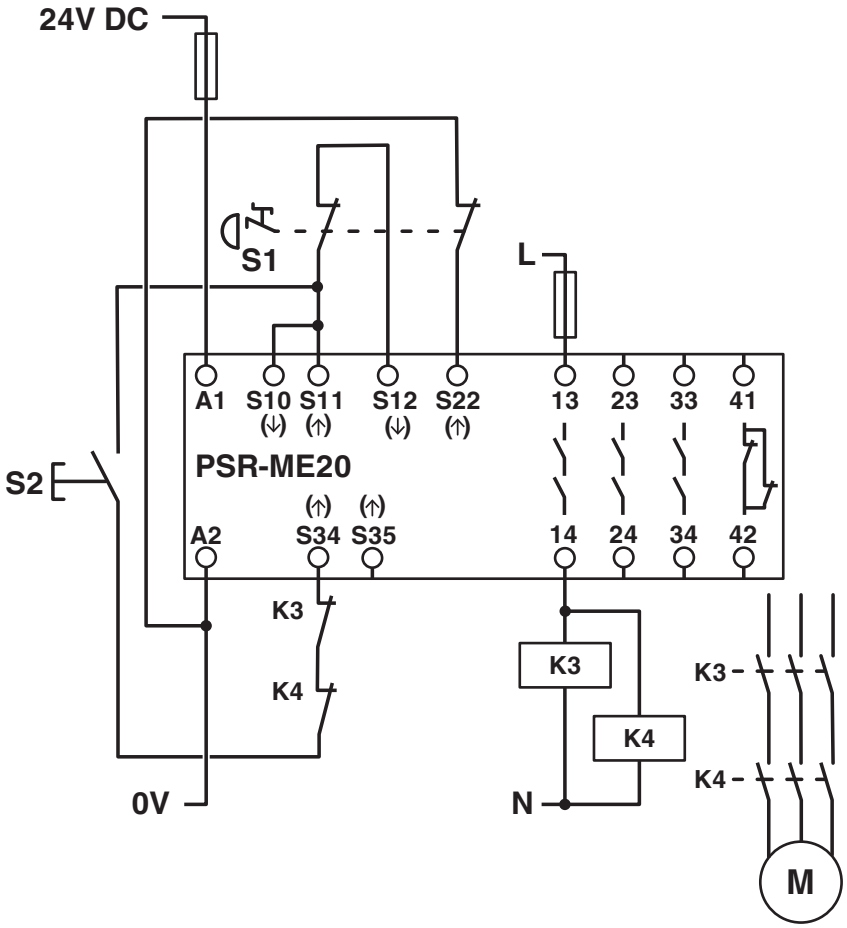

Block diagram

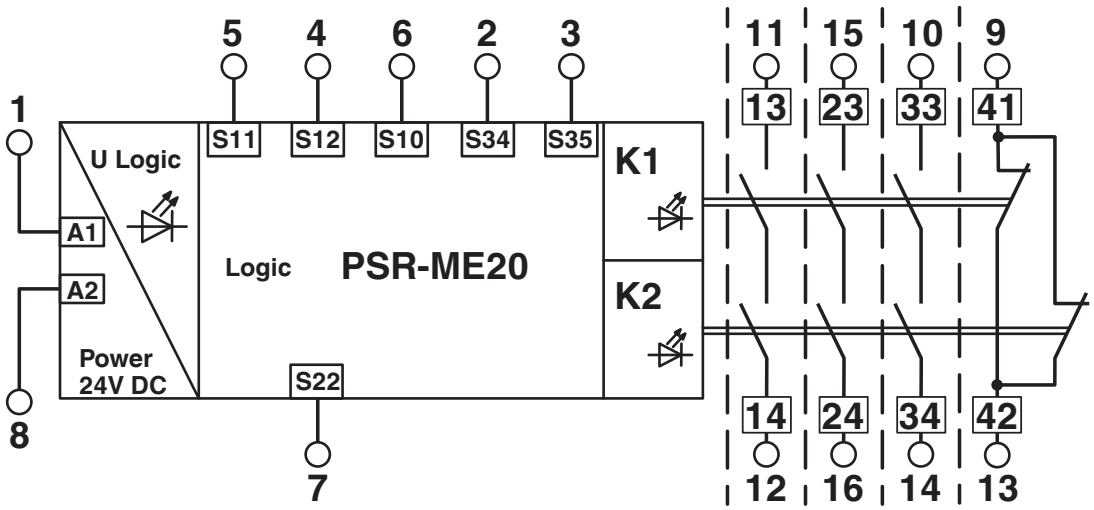

Approvals

To download certificates, visit the product detail page: https://www.phoenixcontact.com/us/products/1301402

Functional Safety
Approval ID: 44 780 15124324

Functional Safety
Approval ID: 44 205 15124324

cULus Listed
Approval ID: E140324

Classifications

ECLASS

ECLASS-13.0	27371819
ECLASS-15.0	27371819
ECLASS-15.0 ASSET	27250101

ETIM

ETIM 10.0	EC001449

UNSPSC

UNSPSC 21.0	39122200

Environmental product compliance

EU RoHS

Fulfills EU RoHS substance requirements	Yes
Exemption	7(a), 7(a)-I, 7(c)-I

China RoHS

Environment friendly use period (EFUP)	EFUP-50
	An article-related China RoHS declaration table can be found in the download area for the respective article under "Manufacturer declaration". For all articles with EFUP-E, no China RoHS declaration table issued and required.

EU REACH SVHC

REACH candidate substance (CAS No.)	Lead(CAS: 7439-92-1)
SCIP	ed7cf660-2f07-41f2-8289-b4b32d3a7e05

Phoenix Contact 2026 © - all rights reserved
https://www.phoenixcontact.com

Phoenix Contact USA
586 Fulling Mill Road
Middletown, PA 17057, United States
(+717) 944-1300
info@phoenixcon.com