# CHARX T1HBI12-DC200-8,0M1 - Vehicle charging inlet

1295694

https://www.phoenixcontact.com/us/products/1295694

Please be informed that the data shown in this PDF document is generated from our online catalog. Please find the complete data in the user documentation. Our general terms of use for downloads are valid.



The figure shows a version of the product

CHARX connect universal, DC CCS Typ 1, Vehicle charging inlet, 200 A permanent, 1000 V DC, Gen 4, Single-core wires connected at one end, length: 8 m, locking actuator: 12 V, 4-pos., Front and rear mounting, M6, housing: black, for charging with direct current (DC), IEC 62196-2, IEC 62196-3, A protective cap is supplied as standard for the DC contacts.

## Product description

Vehicle charging inlet for charging with direct current (DC), compatible with type 1 CCS vehicle charging connectors (SE), for installation in electric vehicles (EV).

## Your advantages

- Complete product range
- Uniform, space-saving dimensions for the installation space and the screw connection points of all Phoenix Contact vehicle charging inlets
- Developed and produced in accordance with the IATF 16949 automotive standard and ISO 9001
- Integrated interlock during charging
- Manual emergency release of the locking actuator
- Protected and sealed against dirt and water with a high degree of protection

## Commercial data

| | |
|---|---|
| Item number | 1295694 |
| Packing unit | 1 pc |
| Minimum order quantity | 1 pc |
| Sales key | EM01 |
| Product key | XWCAIB |
| GTIN | 4063151531720 |
| Weight per piece (including packing) | 17,436 g |
| Weight per piece (excluding packing) | 17 g |
| Customs tariff number | 85444290 |
| Country of origin | PL |

## Technical data

### Notes

| | |
|---|---|
| General | A protective cap is supplied as standard for the DC contacts. |

### Product properties

| | |
|---|---|
| Product type | Vehicle charging inlet |
| Product family | CHARX connect universal |
| Type | Gen 4 |
| Charging standard | DC CCS Typ 1 |
| Charging mode | Mode 4 |
| Customer variations | On request |

### Electrical properties

Charging power and current (DC charging)

| | |
|---|---|
| Type of charging current | DC |
| Charging current | 200 A DC |
| Charging power | 200 kW (DC) |

Pin assignment (Power contacts)

| | |
|---|---|
| Note on the connection method | Crimp connection, cannot be disconnected |
| Number | 5 (L1, N, PE, DC+, DC-) |
| Rated voltage | 1000 V DC |
| Rated current | 200 A DC |

Pin assignment (Signal contacts)

| | |
|---|---|
| Note on the connection method | Crimp connection, cannot be disconnected |
| Type of signal transmission | Pulse width modulation with modulated Powerline communication in accordance with ISO/IEC 15118 / DIN SPEC 70121 |
| Number | 2 (CP, CS) |
| Rated voltage | 30 V AC |
| Rated current | 2 A |
| Coding | 2.7 kΩ (between PE and CS) |
| Insulation resistance | > 200 MΩ |

Locking actuator

| | |
|---|---|
| Locking actuator | 12 V, 4-pos. |
| | Top center position |
| Possible power supply range at the motor | 9 V ... 16 V |
| Maximum voltage for locking detection | 12 V |
| Typical motor current for locking | 0.25 A |
| Reverse current of the motor | max. 1.5 A |
| Max. dwell time with reverse current | 1 s |
| Recommended adaptation time | 600 ms |

| | |
|---|---|
| Pause time after entry or exit path | 3 s |
| Service life insertion cycles | > 10000 load cycles |
| Lock recognition | available |
| Mechanical emergency release | available |
| Ambient temperature (operation) | -40 °C ... 80 °C |

Temperature sensors (Pt 1000)

| | |
|---|---|
| Sensor type | Pt 1000 |
| Standards/regulations | DIN EN 60751 |
| Attachment point | 2 sensors for the DC contacts |

## Dimensions

Vehicle charging inlet

| | |
|---|---|
| Dimensional drawing | 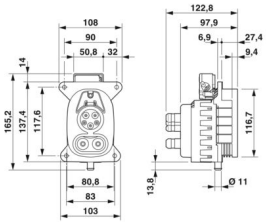  |
| Width | 108 mm |
| Height | 151.2 mm |
| Depth | 122.8 mm |

Bore dimensions

| | |
|---|---|
| Width | 117.6 mm |
| Height | 90 mm |
| Depth | 117.6 mm |

## Material specifications

| | |
|---|---|
| Color (Housing) | black (9005) |
| Color (Mating face) | black (9005) |
| Material (Housing) | Plastic |
| Material (Contact surface) | Silver |

## Cable/line

| | |
|---|---|
| Cable length | 8 m |
| Cable type | Single-core wires connected at one end |

Single-core wires for DC

| | |
|---|---|
| Cable length | 8 m |
| Cable structure | 2 x 70 mm² |
| Single wire, material | Silicone |
| Single wire, color | OG |
| External cable diameter | 17.90 mm ±0.3 mm |

| | |
|---|---|
| Cable resistance | ≤ 0.259 Ω/km |

Single-core wire for PE

| | |
|---|---|
| Cable length | 8 m |
| Cable structure | 1 x 25 mm² |
| Single wire, material | Silicone |
| Single wire, color | GN/YE |
| External cable diameter | 8.60 mm ±0.1 mm |
| Cable resistance | ≤ 0.743 Ω/km |

Single-core wires for locking actuator

| | |
|---|---|
| Cable length | 1.5 m |
| Cable structure | 4 x 0.5 mm² |
| Single wire, material | PVC |
| Single wire, color | BU/RD, BU/GN, BU/YE, BU/BN |
| External cable diameter | 1.60 mm ±0.20 mm |
| Cable resistance | ≤ 37.1 Ω/m |

Single-core wires for Pt 1000 temperature sensors

| | |
|---|---|
| Cable length | 0.9 m |
| Cable structure | 3 x 0.5 mm² |
| Single wire, material | PVC |
| Single wire, color | BN |
| | GN |
| | YE |
| External cable diameter | 1.60 mm ±0.20 mm |
| Cable resistance | ≤ 37.1 Ω/m |

Single-core wires for communication

| | |
|---|---|
| Cable length | 1 m |
| Cable structure | 2 x 0.5 mm² |
| Single wire, material | PVC |
| Single wire, color | BK |
| | WH |
| External cable diameter | 1.60 mm ±0.20 mm |
| Cable resistance | ≤ 37.1 Ω/m |

## Mechanical properties

Mechanical data

| | |
|---|---|
| Insertion/withdrawal cycles | > 10000 |
| Insertion force | < 100 N |
| Withdrawal force | < 100 N |

## Environmental and real-life conditions

Ambient conditions

| | |
|---|---|
| Degree of protection (Vehicle charging inlet) | IP55 (plugged in; when plugged in and ready to operate, the degree of protection is only ensued if both plug-in components are original products from Phoenix Contact or suitable standard-compliant products) |
| | IP67 (Inner area of vehicle charging inlet) |
| Ambient temperature (operation) | -40 °C ... 40 °C (Max. 60 K heating, current reduction required. Observe the limit value for the DC contact temperature of 90 °C.) |
| Ambient temperature (storage/transport) | -40 °C ... 85 °C |
| Altitude | 4000 m (above sea level) |

## Standards and regulations

Standards

| | |
|---|---|
| Standards/regulations | IEC 62196-2 |
| | IEC 62196-3 |
| | SAE J1772 |

## Mounting

| | |
|---|---|
| Mounting type | Front and rear mounting (0 to 90 degree frontal inclination possible) |
| Mounting hole diameter | 6.70 mm (ø) |
| Fixing screws | M6 |
| Screws included in the scope of delivery | none |

## Drawings

Dimensional drawing

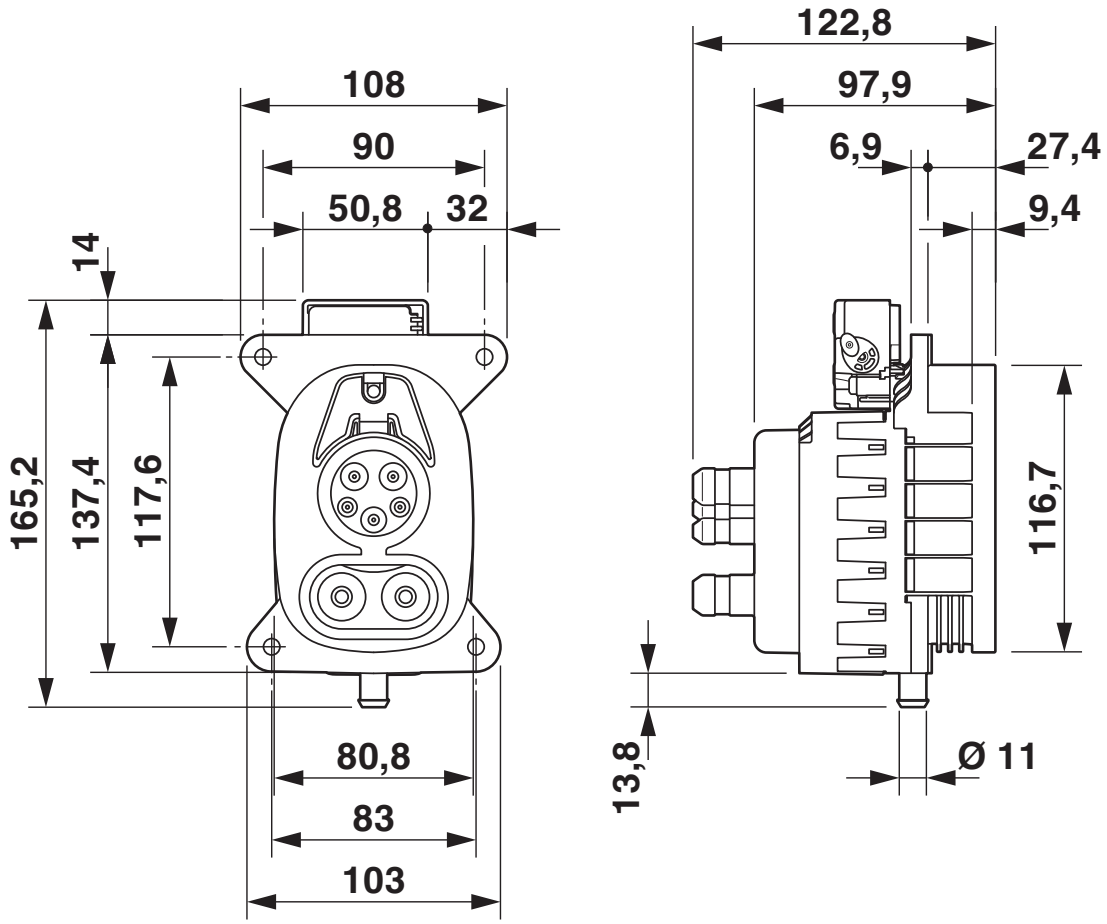


Dimensional drawing

Connection diagram

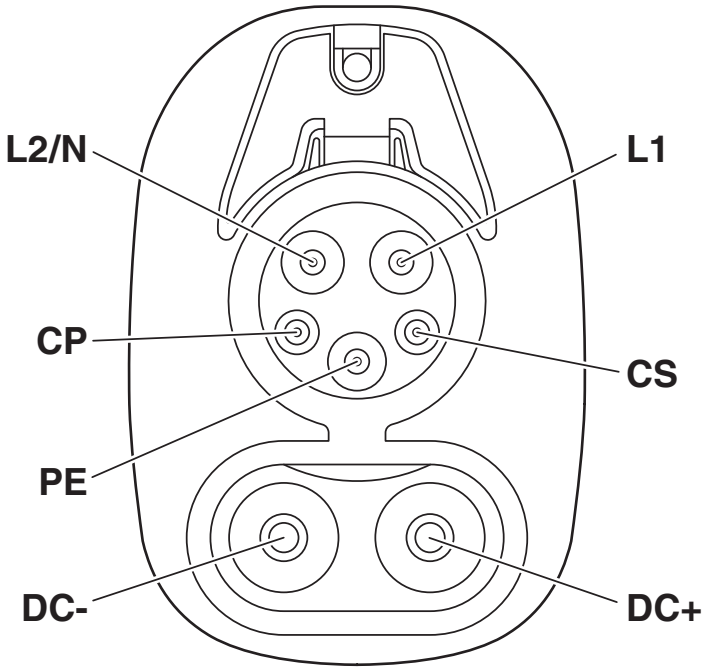


Pin assignment of vehicle charging inlets

Connection diagram

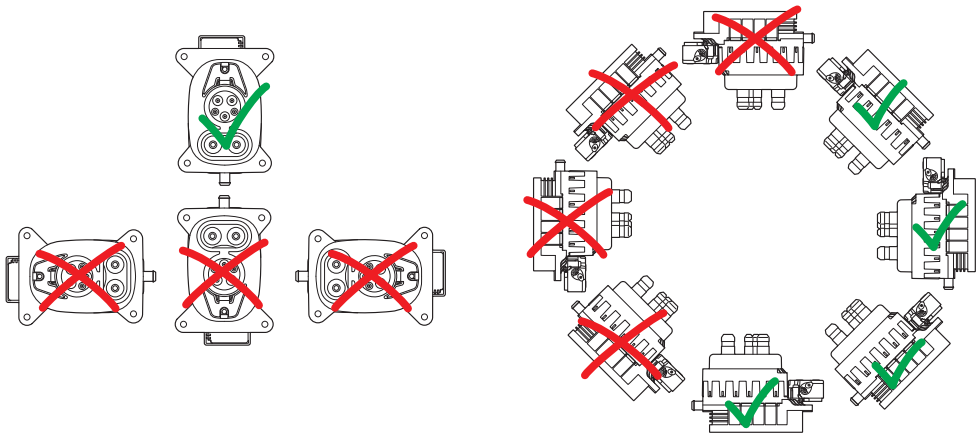

Installation positions

Connection diagram

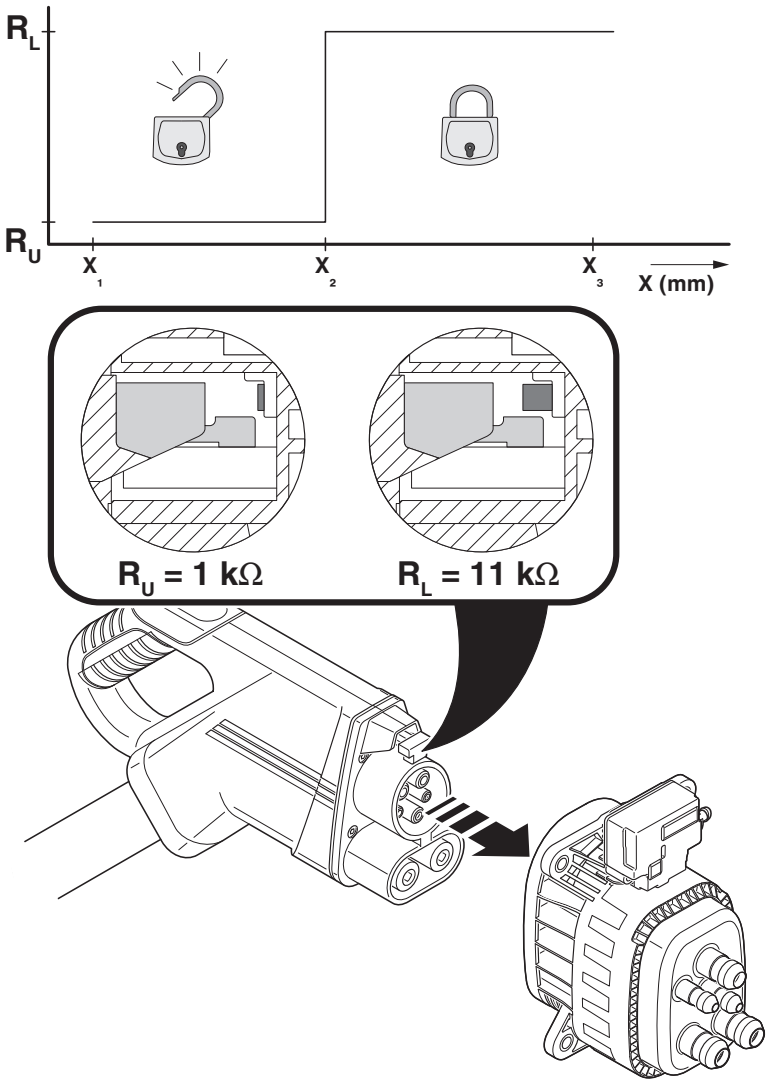


Detection for Vehicle Connector

Schematic diagram

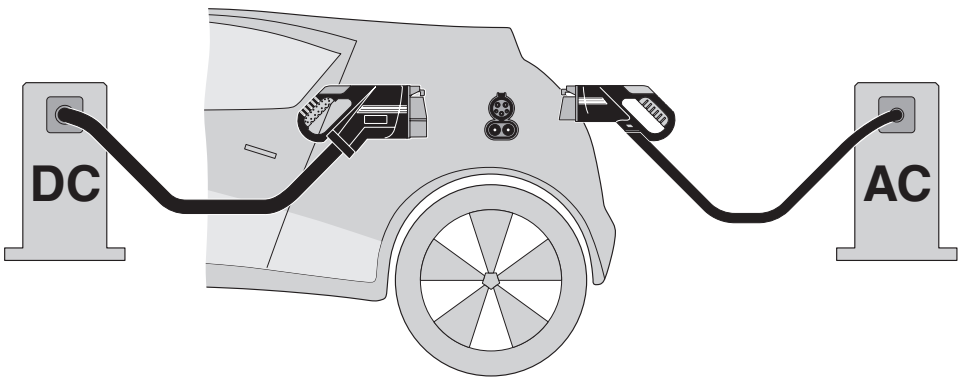


The Combined Charging System (CCS) principle - standard-compliant charging system for electric vehicles, which supports both conventional AC charging and fast DC charging. Both Vehicle Connectors fit into the CCS Vehicle Inlet.

Schematic diagram

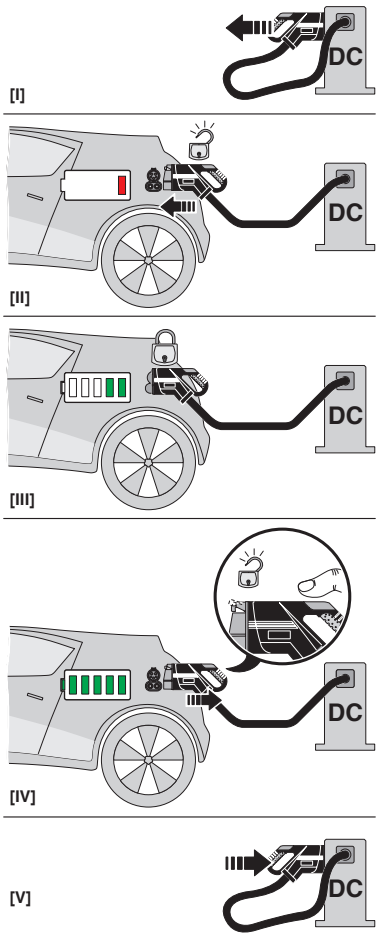


Operating instructions

Schematic diagram

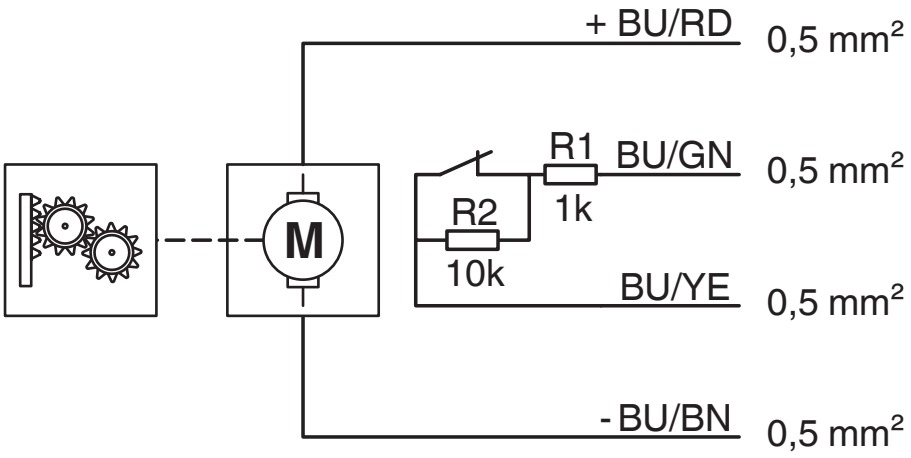


Block diagram of the locking actuator

Schematic diagram

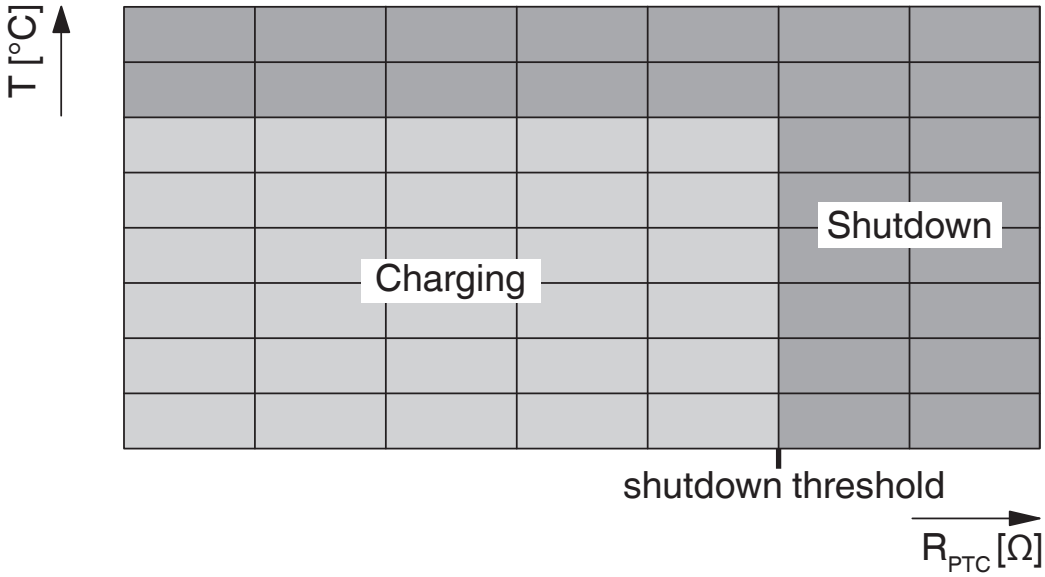


Temperature sensor technology resistance range at AC contacts

Diagram

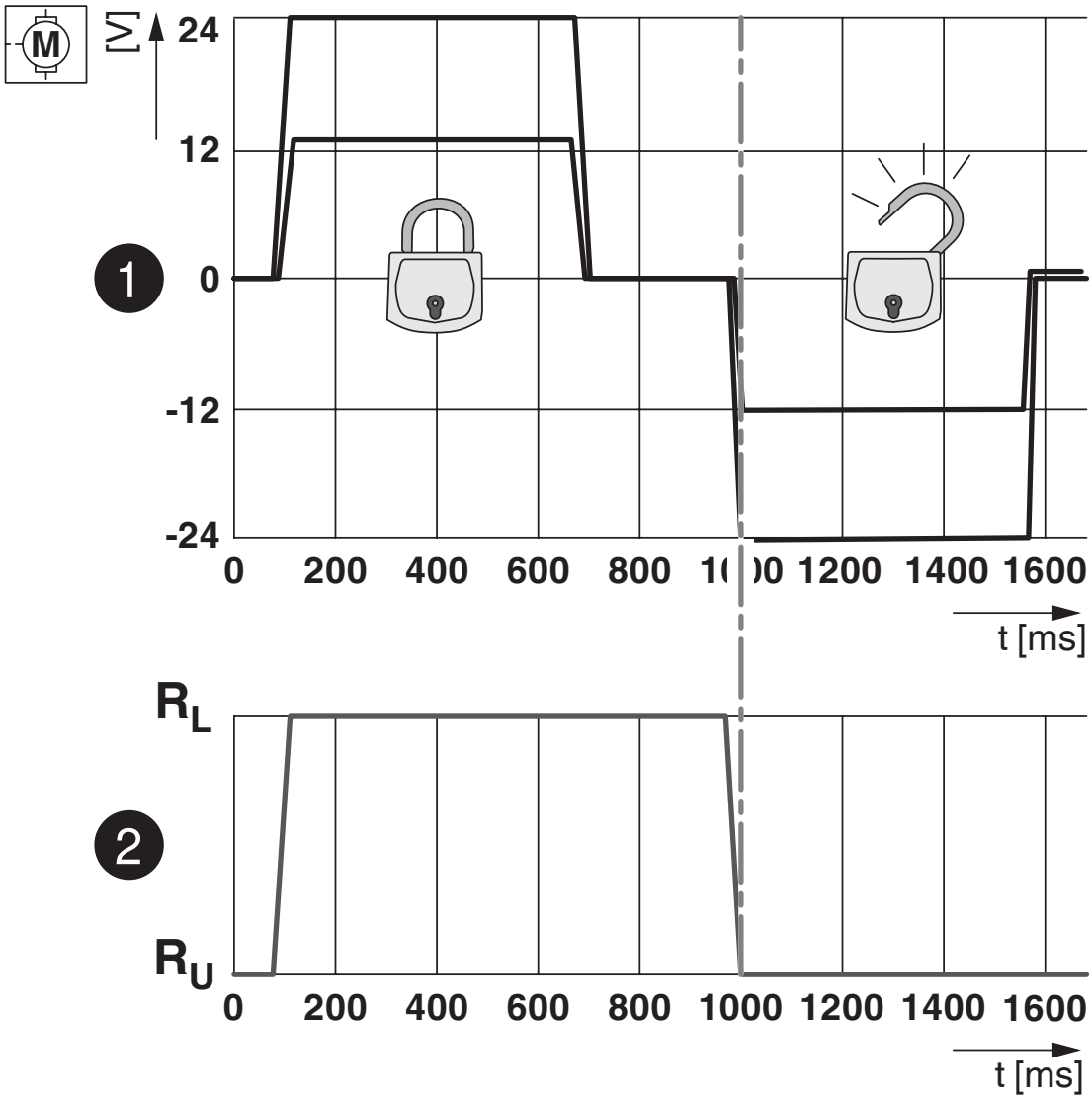


Locking states of the locking actuator

Diagram

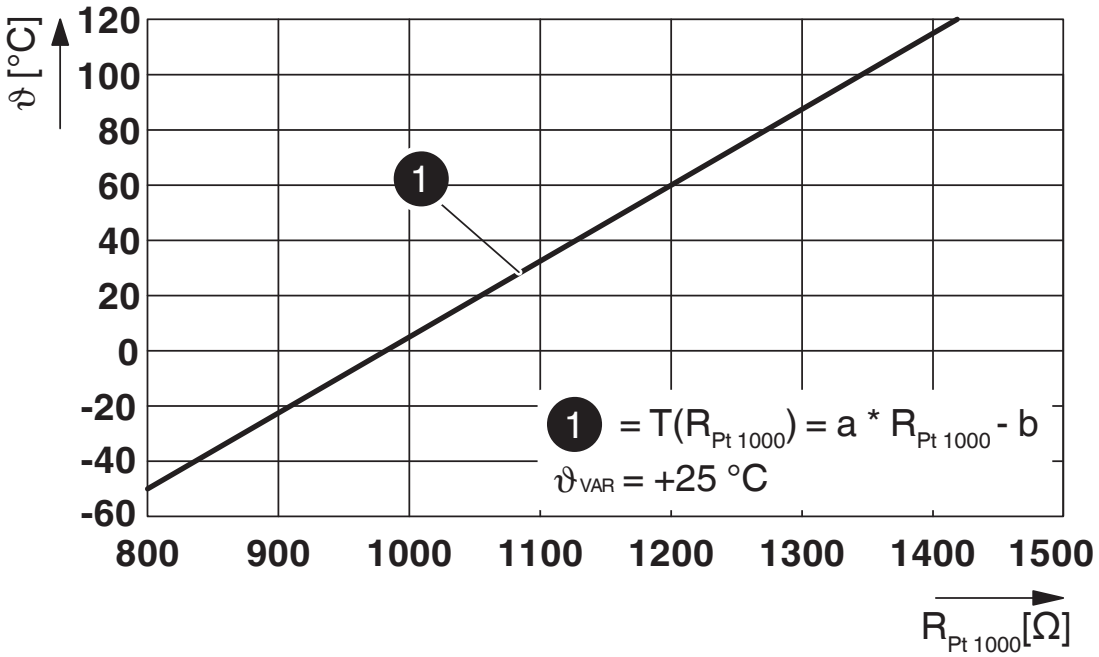


Pt 1000 characteristic curve at an ambient temperature of 25°C for temperature measurement at the DC contacts

## Approvals

To download certificates, visit the product detail page: https://www.phoenixcontact.com/us/products/1295694

**cULus Recognized**
Approval ID: E473195-20210730

| | Nominal voltage $U_N$ | Nominal current $I_N$ | Cross section AWG | Cross section $mm^2$ |
|---|---|---|---|---|
| keine | | | | |
| | 1000 V | 200 A | - | - |

## Classifications

### ECLASS

| | |
|---|---|
| ECLASS-13.0 | 27144706 |
| ECLASS-15.0 | 27144706 |

### ETIM

| | |
|---|---|
| ETIM 10.0 | EC002898 |

### UNSPSC

| | |
|---|---|
| UNSPSC 21.0 | 39121800 |

## Environmental product compliance

EU RoHS

| | |
|---|---|
| Fulfills EU RoHS substance requirements | Yes |
| Exemption | 6(c), 7(c)-I |

China RoHS

| | |
|---|---|
| Environment friendly use period (EFUP) | EFUP-50 |
| | An article-related China RoHS declaration table can be found in the download area for the respective article under "Manufacturer declaration". For all articles with EFUP-E, no China RoHS declaration table issued and required. |

EU REACH SVHC

| | |
|---|---|
| REACH candidate substance (CAS No.) | 2-ethylhexyl 10-ethyl-4,4-dioctyl-7-oxo-8-oxa-3,5-dithia-4-stannatetradecanoate (DOTE)(CAS: 15571-58-1) |
| | Lead(CAS: 7439-92-1) |
| | Bis(2-(2-methoxyethoxy)ethyl)ether(CAS: 143-24-8) |
| | 6,6'-di-tert-butyl-2,2'-methylenedi-p-cresol(CAS: 119-47-1) |
| SCIP | 20e94ed0-dabc-4564-b9f2-c53ee995904a |

EF3.1 Climate Change

| | |
|---|---|
| CO2e kg | 94.37 kg CO2e |


Phoenix Contact 2026 © - all rights reserved
https://www.phoenixcontact.com



Phoenix Contact USA
586 Fulling Mill Road
Middletown, PA 17057, United States
(+717) 944-1300
info@phoenixcon.com