SAC-5PT-F/F-M VP SH - T distributor

1256941

https://www.phoenixcontact.com/us/products/1256941

Please be informed that the data shown in this PDF document is generated from our online catalog. Please find the complete data in the user documentation. Our general terms of use for downloads are valid.



T distributor, CANopen®, DeviceNet™, 5-position, shielded, Socket straight M12, coding: A, on Socket straight M12, coding: A and Plug straight M12, coding: A, Parallel distributor

Your advantages

- Safe use in the field, thanks to a high degree of protection
- Reliable signal transmission – 360° shielding in environments with electromagnetic interference

Commercial data

Item number	1256941
Packing unit	1 pc
Minimum order quantity	1 pc
Sales key	BF10
Product key	AF1GAA
GTIN	4063151363512
Weight per piece (including packing)	49.1 g
Weight per piece (excluding packing)	49.1 g
Customs tariff number	85366990
Country of origin	DE

Technical data

Product properties

Product type	T-distributor
Number of positions	5
No. of cable outlets	2
Shielded	yes
Coding	A
Thread type	M12

Insulation characteristics

Overvoltage category	II
Degree of pollution	3

Electrical properties

Nominal voltage U_N	48 V AC
	60 V DC
Nominal current I_N	4 A
Transmission medium	Copper

Interfaces

Signal type/category	CANopen®
	DeviceNet™

Signaling

Status display	no
Status display present	no

Dimensions

Dimensional drawing	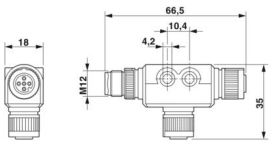
Height	18 mm
Length	66.5 mm

Material specifications

Material	PBT (Female connector contact carrier)
	(Pin contact carrier)
Flammability rating according to UL 94	V0
Seal material	NBR
Material of grip body	PBT
Contact material	CuZn (pin) / CuSn (socket)

Contact surface material	Ni/Au
Material for screw connection	Zinc die-cast, nickel-plated

Connector

Connection 1

Type	Socket straight M12
Coding type	A

Connection 2

Type	Socket straight M12
Coding type	A

Connection 3

Type	Plug straight M12
Coding type	A

Mechanical properties

Mechanical data

Insertion/withdrawal cycles	≥ 100

Environmental and real-life conditions

Ambient conditions

Degree of protection	IP65
Ambient temperature (operation) (male connector/female connector)	-25 °C ... 85 °C (Plug / socket)

Standards and regulations

Standard designation	M12 connector
Standards/specifications	according to IEC 61076-2-101

Drawings

Dimensional drawing

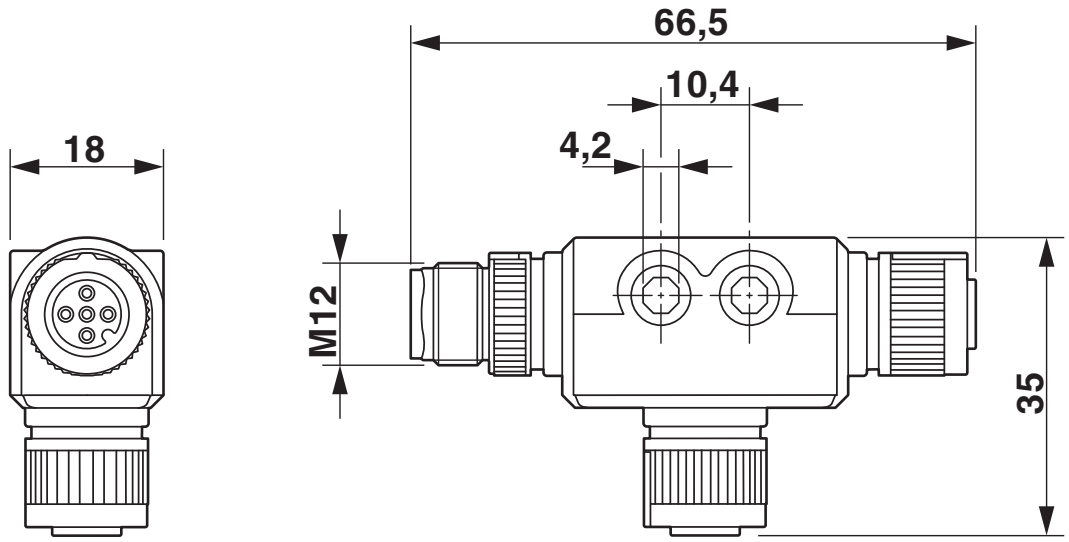

M12 T distributor

Schematic diagram

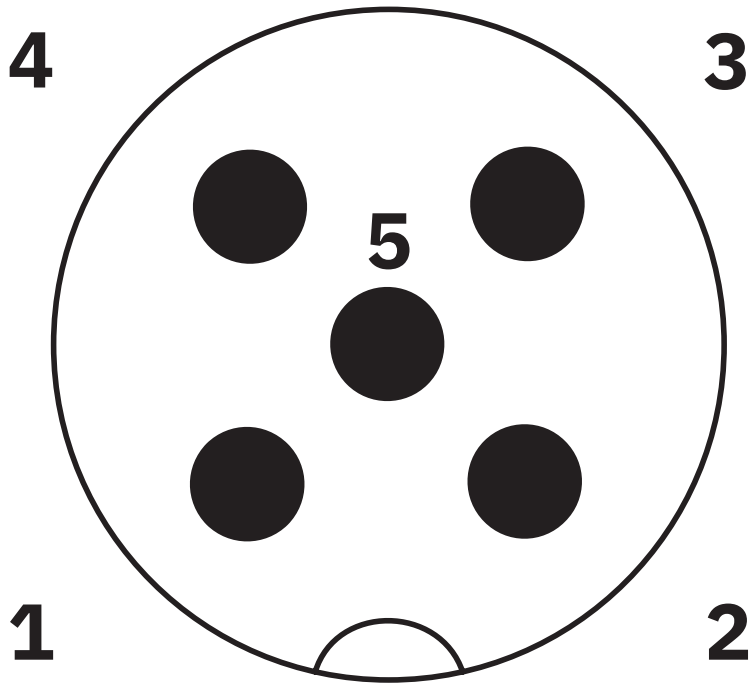

Pin assignment M12 male connector, 5-pos., A-coded, male side

Schematic diagram

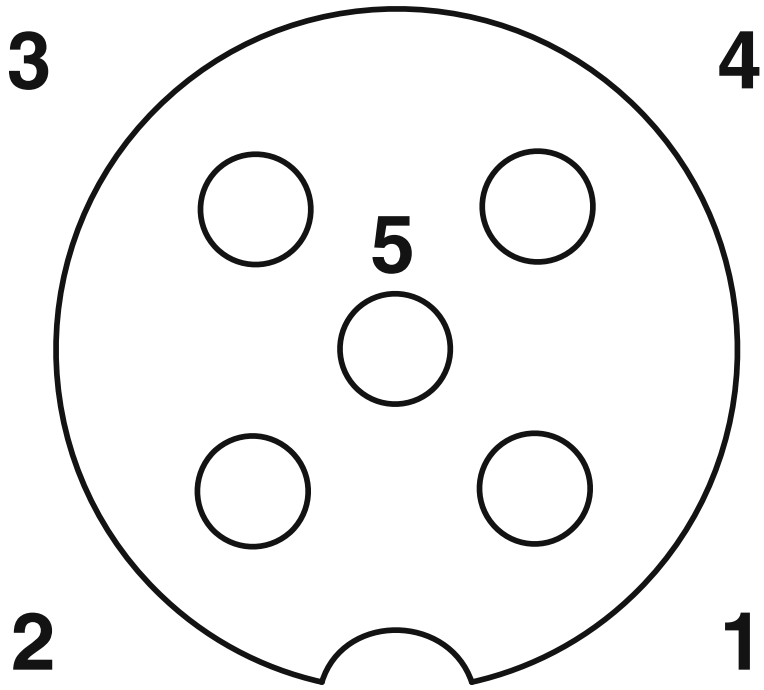

Pin assignment M12 socket, 5-pos., A-coded, socket side view

Circuit diagram

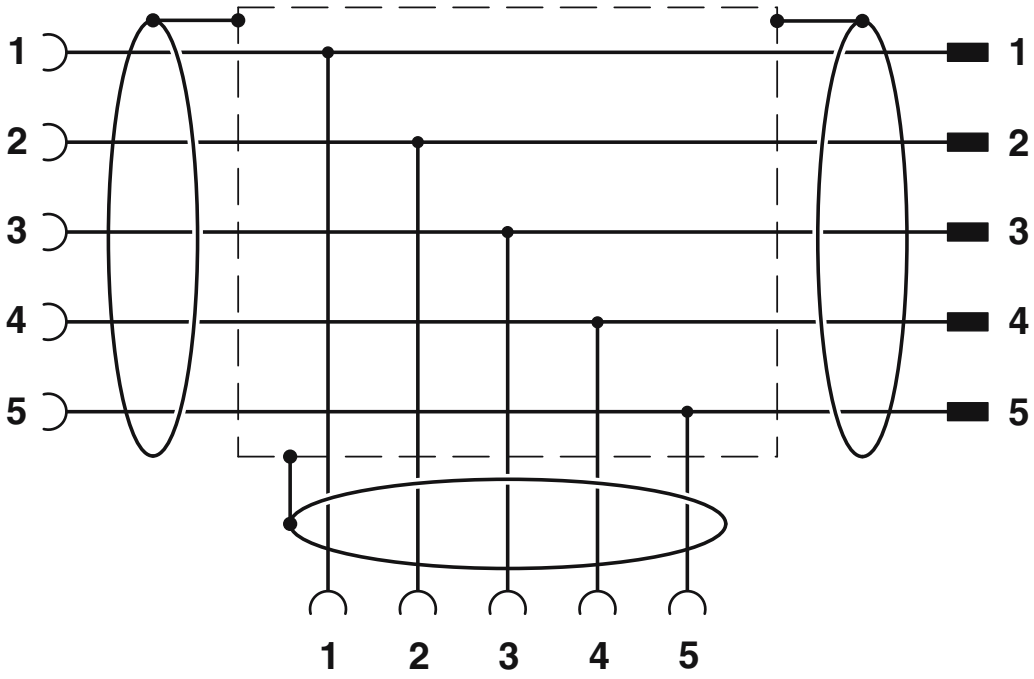

Contact assignment of the M12 plug and the M12 socket

Classifications

ECLASS

ECLASS-13.0	27440106
ECLASS-15.0	27440106

ETIM

ETIM 10.0	EC002925

UNSPSC

UNSPSC 21.0	31251500

Environmental product compliance

EU RoHS

Fulfills EU RoHS substance requirements	Yes, No exemptions

China RoHS

Environment friendly use period (EFUP)	EFUP-E
	No hazardous substances above the limits

EU REACH SVHC

REACH candidate substance (CAS No.)	No substance above 0.1 wt%

Phoenix Contact 2026 © - all rights reserved
https://www.phoenixcontact.com

Phoenix Contact USA
586 Fulling Mill Road
Middletown, PA 17057, United States
(+717) 944-1300
info@phoenixcon.com