F-MS 12 P - Type 2 surge protection plug

1256115

https://www.phoenixcontact.com/us/products/1256115

Please be informed that the data shown in this PDF document is generated from our online catalog. Please find the complete data in the user documentation. Our general terms of use for downloads are valid.



Type 2 surge protection plug with N-PE total current spark gaps for VAL-MS-PT base element.

Commercial data

Item number	1256115
Packing unit	10 pc
Minimum order quantity	1 pc
Product key	CL132A
GTIN	4063151362546
Weight per piece (including packing)	41.39 g
Weight per piece (excluding packing)	41.39 g
Country of origin	DE

Technical data

Product properties

Product type	Replacement plug
Product family	VALVETRAB MS
IEC test classification	II
	T2
EN type	T2
IEC power supply system	TN
	TT
Type	Male
Number of positions	1
Surge protection fault message	optical

Insulation characteristics

Overvoltage category	III
Pollution degree	2

Electrical properties

Nominal frequency f_N	50 Hz (60 Hz)

Connection data

Connection method	pluggable

Dimensions

Dimensional drawing	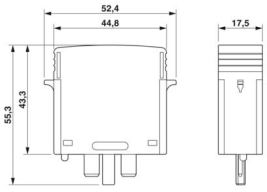
Width	17.5 mm
Height	52.4 mm
Depth	55.3 mm
Horizontal pitch	1 HP

Material specifications

Color	light gray (RAL 7035)
Flammability rating according to UL 94	V-0
CTI value of material	600
Insulating material	PA 6.6
Material group	I
Housing material	PA 6.6

Protective circuit

Mode of protection	N-PE
Direction of action	N-PE
Nominal voltage U_N	240/415 V AC (TN - only N-PE)
	240/415 V AC (TT - only N-PE)
Nominal frequency f_N	50 Hz (60 Hz)
Maximum continuous operating voltage U_C	260 V AC
Protective conductor current I_{PE}	≤ 5 µA
Standby power consumption P_C	≤ 1.5 mVA
Nominal discharge current I_n (8/20) µs	20 kA
Maximum discharge current I_{max} (8/20) µs	40 kA
Follow current interrupt rating I_{fi}	100 A (260 V)
Voltage protection level U_p	≤ 1.5 kV
Residual voltage U_{res}	≤ 0.4 kV (at I_n)
	≤ 0.25 kV (at 10 kA)
	≤ 0.15 kV (at 5 kA)
	≤ 0.1 kV (at 3 kA)
Front-of-wave sparkover voltage at 6 kV (1.2/50) µs	≤ 1.5 kV
TOV behavior at U_T	1200 V AC (200 ms / withstand mode)
Response time t_A	≤ 100 ns

Environmental and real-life conditions

Ambient conditions

Degree of protection	IP20
Ambient temperature (operation)	-40 °C ... 85 °C
Ambient temperature (storage/transport)	-40 °C ... 85 °C
Altitude	≤ 2000 m (amsl)
Permissible humidity (operation)	5 % ... 95 %
Shock (operation)	25g (Half-sine / 11 ms / 3x ±X, ±Y, ±Z)
Vibration (operation)	2g (10 ... 500 Hz / 2.5 h / X, Y, Z)

Standards and regulations

Standards/specifications	IEC 61643-11
Note	2011
Standards/specifications	EN 61643-11
Note	2012

Mounting

Mounting type	on base element

Drawings

Dimensional drawing

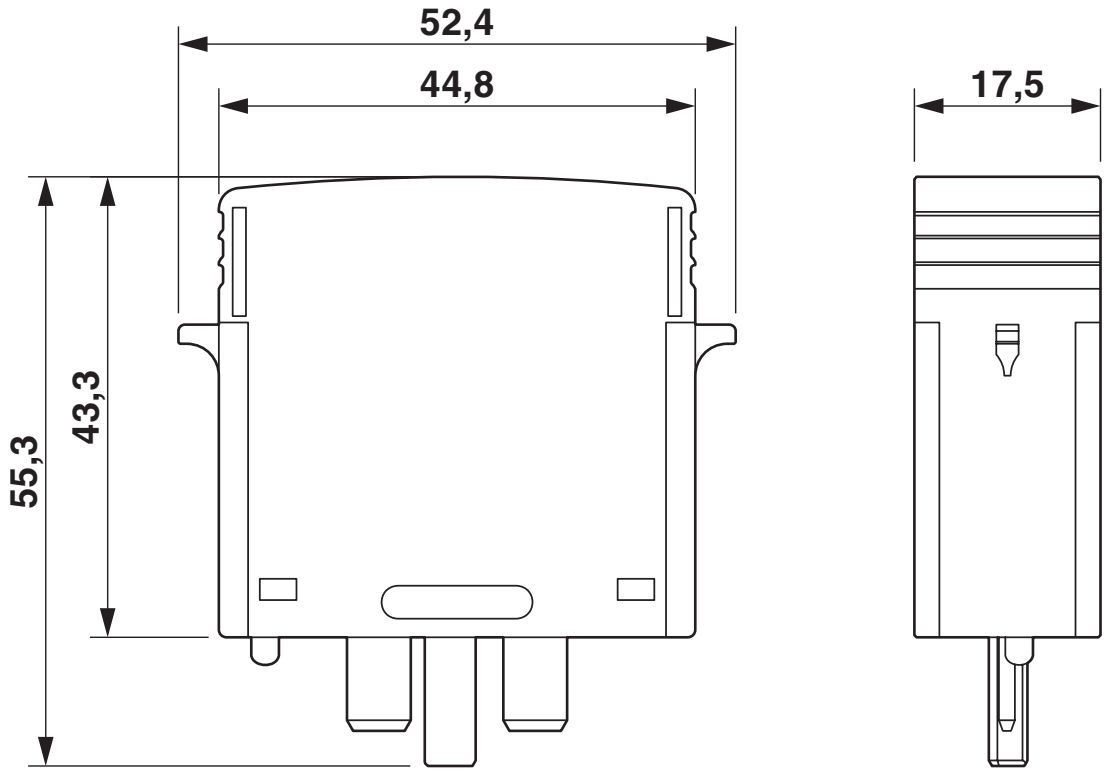

Circuit diagram



Approvals

To download certificates, visit the product detail page: https://www.phoenixcontact.com/us/products/1256115

IECEE CB Scheme
Approval ID: NL-71987

CCA
Approval ID: NTR-NL 7875

KEMA-KEUR
Approval ID: 71-118125

Classifications

ECLASS

ECLASS-13.0	27171292
ECLASS-15.0	27171292

ETIM

ETIM 10.0	EC002496

UNSPSC

UNSPSC 21.0	39121600

Environmental product compliance

EU RoHS

Fulfills EU RoHS substance requirements	Yes, No exemptions

China RoHS

Environment friendly use period (EFUP)	EFUP-E
	No hazardous substances above the limits

EU REACH SVHC

REACH candidate substance (CAS No.)	No substance above 0.1 wt%

Phoenix Contact 2026 © - all rights reserved
https://www.phoenixcontact.com

Phoenix Contact USA
586 Fulling Mill Road
Middletown, PA 17057, United States
(+717) 944-1300
info@phoenixcon.com