HC-STA-RJ45PC-HS-M20-PLRBK - Connector set

1249558

https://www.phoenixcontact.com/us/products/1249558

Please be informed that the data shown in this PDF document is generated from our online catalog. Please find the complete data in the user documentation. Our general terms of use for downloads are valid.



Connector set, D7, material: PA, cable outlet: lateral, with slotted seal, with adapter for patch cables

Your advantages

- Lower costs than metal version
- Labeling option using 9 x 20 mm marking label
- Low weight
- Lower risk of condensation

Commercial data

Item number	1249558
Packing unit	1 pc
Minimum order quantity	1 pc
Sales key	BF63
Product key	AF7AFX
GTIN	4063151354763
Weight per piece (including packing)	33.1 g
Weight per piece (excluding packing)	22.22 g
Customs tariff number	85366990
Country of origin	CN

Set consists of

HC-Q-I-RJ45-AD-PC-M - Contact insert

1077120

https://www.phoenixcontact.com/us/products/1077120



Contact insert, number of positions: RJ45, size: D7, type : RJ45, Pin, 50 V, 1 A, application: Data, Adapter for patch cables

HC-STA-D07-HHFS-1SGM20-PL-BK - Housing

1419257

https://www.phoenixcontact.com/us/products/1419257



Sleeve housing D7, for single locking latch, material: PA, cable outlets: 1, lateral, M20, height: 54.5 mm, cable gland: with, Standard

Technical data

Notes

General	Connectors may be operated only when there is no load/voltage.

Product properties

Product type	Connector set
Housing type	Sleeve housing
Series	HC-D
Type	D7
Type of the screw connection	1x M20
Cable outlet	lateral

Insulation characteristics

Degree of pollution	3

Connection data

Conductor cross-section	0.14 mm² ... 2.5 mm²
	0.14 mm² ... 2.5 mm²

Material specifications

Material	PA
Flammability rating according to UL 94	V0
Seal material	NBR
Housing material	PA
Contact carrier material	PC

Cable/line

External cable diameter	4 mm ... 7 mm

Mechanical properties

Mechanical data

Type of the screw connection	1x M20

Environmental and real-life conditions

Ambient conditions

Degree of protection	IP66
Impact strength	IK06
Ambient temperature (operation)	-25 °C ... 60 °C

Mounting

Mounting type	Latching with lower housing part

Drawings

Dimensional drawing

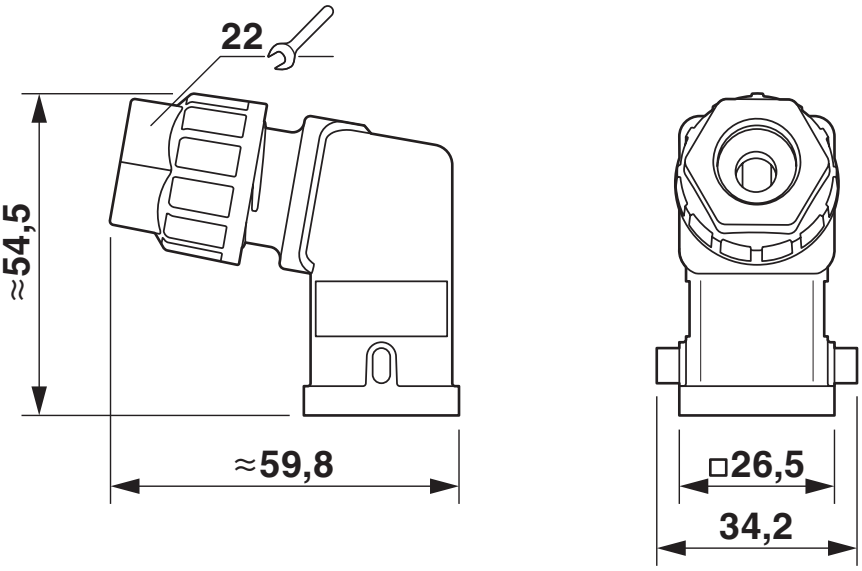

Dimensional drawing

Classifications

ECLASS

ECLASS-13.0	27440113
ECLASS-15.0	27440113

ETIM

ETIM 10.0	EC002636

UNSPSC

UNSPSC 21.0	39121400

Environmental product compliance

EU RoHS

Fulfills EU RoHS substance requirements	Yes, No exemptions

China RoHS

Environment friendly use period (EFUP)	EFUP-E
	No hazardous substances above the limits

EU REACH SVHC

REACH candidate substance (CAS No.)	No substance above 0.1 wt%

Phoenix Contact 2026 © - all rights reserved
https://www.phoenixcontact.com

Phoenix Contact USA
586 Fulling Mill Road
Middletown, PA 17057, United States
(+717) 944-1300
info@phoenixcon.com