# HC-STA-RJ45CT-HS-M20-PLRBK - Connector set

1249557

https://www.phoenixcontact.com/us/products/1249557

Please be informed that the data shown in this PDF document is generated from our online catalog. Please find the complete data in the user documentation. Our general terms of use for downloads are valid.



Connector set, D7, number of positions: 8, CAT6$_A$, material: PA, connection method: Crimp connection, connection cross section: AWG 24- 27, cable outlet: lateral, With RJ45 contact insert, with slotted seal

## Your advantages

- Lower costs than metal version
- Labeling option using 9 x 20 mm marking label
- Low weight
- Lower risk of condensation

## Commercial data

| | |
|---|---|
| Item number | 1249557 |
| Packing unit | 1 pc |
| Minimum order quantity | 1 pc |
| Sales key | BF63 |
| Product key | AF7AFX |
| GTIN | 4063151355012 |
| Weight per piece (including packing) | 36.92 g |
| Weight per piece (excluding packing) | 36.92 g |
| Customs tariff number | 85366990 |
| Country of origin | CN |

## Set consists of

### HC-Q-I-RJ45-08-M - Contact insert

1077117

https://www.phoenixcontact.com/us/products/1077117



Contact insert, number of positions: RJ45, size: D7, type : RJ45, Pin, 50 V, 1 A, application: Data, With RJ45 contact insert

### HC-STA-D07-HHFS-1SGM20-PL-BK - Housing

1419257

https://www.phoenixcontact.com/us/products/1419257



Sleeve housing D7, for single locking latch, material: PA, cable outlets: 1, lateral, M20, height: 54.5 mm, cable gland: with, Standard

# Technical data

## Notes

| | |
|---|---|
| General | Connectors may be operated only when there is no load/voltage. |

## Product properties

| | |
|---|---|
| Product type | Connector set |
| Housing type | Sleeve housing |
| Series | HC-D |
| Application | Data |
| Type | D7 |
| Number of positions | 8 |
| Connection profile | RJ45 |
| Type of the screw connection | 1x M20 |
| Cable outlet | lateral |

### Insulation characteristics

| | |
|---|---|
| Overvoltage category | III |
| Degree of pollution | 3 |

## Electrical properties

| | |
|---|---|
| Rated voltage (III/3) | 50 V |
| Rated surge voltage | 0.8 kV |
| Rated current | 1 A |
| Nominal voltage $U_N$ | 50 V |
| Transmission characteristics (category) | $CAT6_A$ (IEC 60512-27-100:2008, TIA-568-C.2:2009) |

## Connection data

| | |
|---|---|
| Connection method | Crimp connection |
| Conductor cross-section | 0.14 mm² ... 0.25 mm² |
| | 0.14 mm² ... 0.25 mm² (flexible) |
| | 0.14 mm² ... 0.25 mm² |
| | 0.14 mm² ... 0.25 mm² (flexible) |
| Connection cross section AWG | 24 ... 27 (flexible) |

## Material specifications

| | |
|---|---|
| Color | black (RAL 9005) |
| Material | PA |
| Flammability rating according to UL 94 | V0 |
| Seal material | NBR |
| Housing material | PA |
| Contact material | Copper alloy |
| Contact surface material | Au |
| Contact carrier material | PC |

## Cable/line

| | |
|---|---|
| External cable diameter | 5 mm ... 6 mm |

## Mechanical properties

Mechanical data

| | |
|---|---|
| Type of the screw connection | 1x M20 |

## Environmental and real-life conditions

Ambient conditions

| | |
|---|---|
| Degree of protection | IP66 |
| Impact strength | IK06 |
| Ambient temperature (operation) | -25 °C ... 60 °C |

## Mounting

| | |
|---|---|
| Mounting type | Latching with lower housing part |

## Drawings

Dimensional drawing

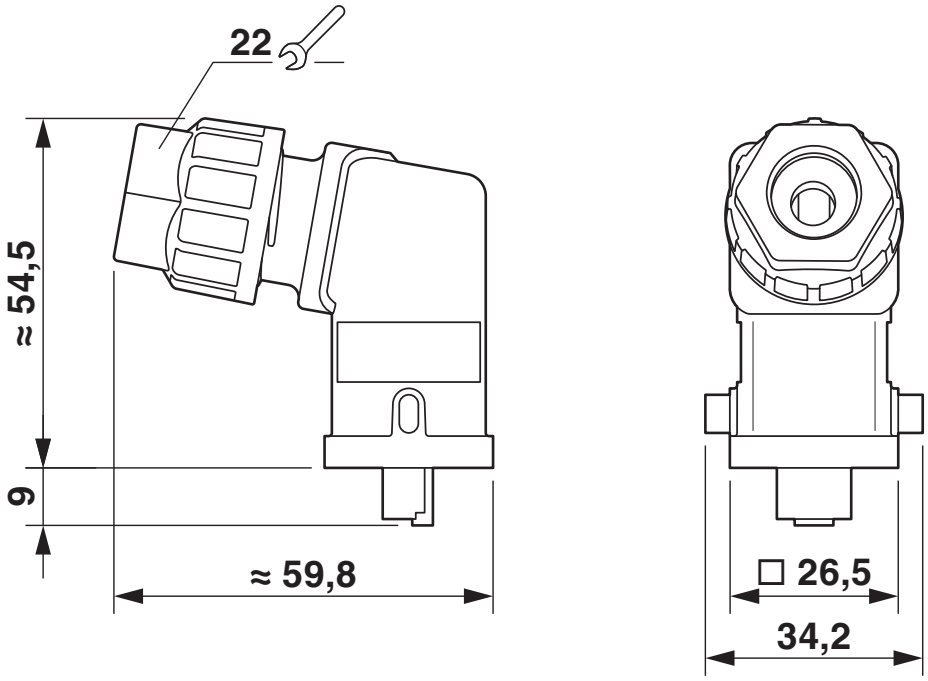


Dimensional drawing

## Classifications

### ECLASS

| | |
|---|---|
| ECLASS-13.0 | 27440113 |
| ECLASS-15.0 | 27440113 |

### ETIM

| | |
|---|---|
| ETIM 10.0 | EC002636 |

### UNSPSC

| | |
|---|---|
| UNSPSC 21.0 | 39121400 |

## Environmental product compliance

EU RoHS

| | |
|---|---|
| Fulfills EU RoHS substance requirements | Yes, No exemptions |

China RoHS

| | |
|---|---|
| Environment friendly use period (EFUP) | EFUP-E |
| | No hazardous substances above the limits |

EU REACH SVHC

| | |
|---|---|
| REACH candidate substance (CAS No.) | No substance above 0.1 wt% |


Phoenix Contact 2026 © - all rights reserved
https://www.phoenixcontact.com



Phoenix Contact USA
586 Fulling Mill Road
Middletown, PA 17057, United States
(+717) 944-1300
info@phoenixcon.com