TC ROUTER 4102T-4G EU WLAN - Router

1234353

https://www.phoenixcontact.com/us/products/1234353

Please be informed that the data shown in this PDF document is generated from our online catalog. Please find the complete data in the user documentation. Our general terms of use for downloads are valid.



Industrial 4G LTE router, EU device, 3G (UMTS/HSPA) and 2G (GPRS/EDGE) fallback, WLAN access point 802.11a/b/g/n, 150 Mbps, 2.4 GHz + 5 GHz, 2-port switch, firewall, NAT, IPsec and OpenVPN support, 4 DI, 2 DO

Product description

The TC ROUTER 4000... cellular routers are the successor to: TC ROUTER 3000... (TC ROUTER 3002T-4G, 2702528 and TC ROUTER 3002T-3G, 2702529), TC ROUTER 2000... (TC ROUTER 2002T-4G, 2702530 and TC ROUTER 2002T-3G, 2702531) In addition to the proven 4G-LTE cellular connection, the routers also feature an integrated WLAN interface or a serial RS-232/485 interface, depending on the version. Connection to the internet can be established via the cellular interface, via a wired WAN port, or via an existing WLAN network.

Your advantages

- Industrial 4G cellular router (LTE)
- Fallback to 3G (UMTS/HSPA) and 2G (GPRS/EDGE)
- Virtual dedicated line to connect networks via cellular network
- IPsec and OpenVPN
- Configuration via web-based management or microSD card
- Two local Ethernet connections
- Switchable energy-saving mode
- Integrated logbook
- Extended temperature range of -40 °C … +70 °C
- Integrated WLAN access point
- Micro SIM and eSIM for maximum network availability
- Four digital inputs
- Two digital outputs
- Highest level of cybersecurity with NTS (Network Time Security)

Commercial data

Item number	1234353
Packing unit	1 pc
Minimum order quantity	1 pc
Sales key	DN25
Product key	DNC422
GTIN	4063151338060
Weight per piece (including packing)	344 g
Weight per piece (excluding packing)	340.8 g
Customs tariff number	85176200
Country of origin	DE

Technical data

Notes

Note on application

Note on application	Only for industrial use

Product properties

Product type	Cellular router
Application	Ethernet
MTTF	384 Years (SN 29500 standard, temperature 25°C, operating cycle 21%)
	180 Years (SN 29500 standard, temperature 40°C, operating cycle 34.25%)
	64 Years (SN 29500 standard, temperature 40°C, operating cycle 100%)

Security functions

1:1 Network Address Translation (NAT) in the VPN	supported
Number of VPN tunnels	IPsec or OpenVPN, no limit, limited by system resources and available bandwidth
Authentication	X.509v3, PSK
Data integrity	IPsec: MD5, SHA-1, SHA-256, SHA-512, AESXCBC
	OpenVPN: RSA-..., MD5, SHA..., MDC2, MD5-SHA1, RIPEMD160, MD4, WHIRLPOOL, BLAKE..., ID-RSASSA-PKCS1-V1..., SM3
Filtering	MAC addresses
	IP addresses
	Ports
	Protocols
Firewall rules	Stateful inspection firewall
Internet Protocol Security (IPsec) mode	ESP tunnel
Routing	VLAN
	VRRP
	IP Pass-Through
	NAPT
	Multipath
	OSF
	BGP
	Masquerading
	Mobile-IP
	Bridging
	STP/RSTP
Encryption methods	IPsec: 3DES, AES, Blowfish
	OpenVPN: AES, ARIA, CAMELLIA, SEED, SM4, BF, CAST5, DES, IDEA, RC2

Electrical properties

Electrical isolation	VCC // LTE // Ethernet // PE
Maximum power dissipation for nominal condition	4.32 W
Mains type	Cellular communication

Supply

Supply voltage range	10 V DC ... 30 V DC (Via pluggable Push-in terminal block)
Typical current consumption	< 180 mA (24 V DC)
	< 500 mA (10 V DC)
	≤ 3 mA (With activated energy-saving mode)
Max. current consumption	1.5 A

Function

Management	Web-based management
	SNMPv1/v2/v3
	SSHv2
	Telnet
	TOM (TC ROUTER Online Manager, management software from Phoenix Contact)
Data storage system	Micro SDHC card

Input data

Digital

Description of the input	Digital input
Number of inputs	4
Voltage input signal	10 V DC ... 30 V DC
Switching level "0" signal	< 8 V DC
Switching level "1" signal	10 V DC ... 30 V DC

Output data

Signal

Output name	Digital output
Number of outputs	2
Voltage output signal	10 V DC ... 30 V DC (depending on the operating voltage)
Current output signal	≤ 50 mA (Not short-circuit proof)

Connection data

Supply

Connection method	Push-in spring connection
Conductor cross-section, flexible, with ferrule, without plastic sleeve	0.25 mm² ... 1.5 mm²
Conductor cross-section, flexible, with ferrule, with plastic sleeve	0.25 mm² ... 0.75 mm²
Single conductor/terminal point, rigid	0.14 mm² ... 1.5 mm²

Single-wire/terminal point, flexible	0.14 mm² ... 1.5 mm²
Conductor cross-section, flexible [AWG]	26 ... 16
Stripping length	9.00 mm

Interfaces

Web server	yes

Data: Ethernet interface, 10/100Base-T(X) in accordance with IEEE 802.3

Serial transmission speed	10/100 Mbps, auto negotiation
Connection method	RJ45 jack, shielded
No. of channels	2
Transmission length	100 m (shielded twisted pair)
Protocols supported	TCP/IP, UDP/IP, HTTP(S), (S)FTP, TFTP, SCEP, RADIUS
	VPN: IPsec, OpenVPN, GRE, L2TP, PPTP
	Network Discovery: LLDP, CDP, FDP, SONMP, EDP, IRDP
Auxiliary protocols	ARP, DHCP, DNS, DynDNS, PING (ICMP), SMTP(S), NTP, NTS, SSL/TLS, STARTTLS, SMS

Wireless

Interface description	GSM / GPRS / EDGE / UMTS / HSPA / LTE (FDD)
Frequency range	800 MHz (LTE B20)
	850 MHz (LTE B5)
	900 MHz (LTE B8)
	1800 MHz (LTE B3)
	2100 MHz (LTE B1)
	2600 MHz (LTE B7)
	850 MHz (UMTS/HSPA B5)
	900 MHz (UMTS/HSPA B8)
	1900 MHz (UMTS/HSPA B2)
	2100 MHz (UMTS/HSPA B1)
	850 MHz (2 W (EGSM))
	900 MHz (2 W (EGSM))
	1800 MHz (1 W (EGSM))
	1900 MHz (1 W (EGSM))
Data rate	≤ 150 Mbps (LTE, DL)
	≤ 50 Mbps (LTE, UL)
Number	2
Connection method	SMA (female)
Antenna	50 Ω impedance SMA antenna socket
SIM Interface	Micro SIM (3FF)
	eSIM (several profiles)
GPRS	Class 12, Class B
	CS1 ... CS4
EDGE	Multislot Class 12
UMTS	HSPA 3GPP R8

LTE	CAT4
Country support	Europe

Wireless

Interface description	WLAN in accordance with IEEE 802.11 a/b/g/n
Wireless modules that can be connected	10
Operating mode	Access point (maximum of 10 clients)
	Client
	Dual mode
	Mesh
Frequency	5 GHz
	2.4 GHz
Data rate	11 Mbps (2.4 GHz, 20 MHz, /b)
	54 Mbps (2.4 GHz, 20 MHz, /g)
	144 Mbps (2.4 GHz, 20 MHz, /n)
	54 Mbps (5 GHz, 20 MHz, /a)
	150 Mbps (5 GHz, 40 MHz, /n)
Number	2
Connection method	RSMA (female)
Security	WPA, WPA2 (TKIP, CCMP, PSK, RADIUS)

Dimensions

Dimensional drawing	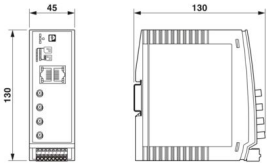
Width	45 mm
Height	130 mm
Depth	130 mm

Material specifications

Color (Upper housing part)	light gray (RAL 7035)
Material (Housing)	Polycarbonate

Environmental and real-life conditions

Ambient conditions

Degree of protection	IP20
Ambient temperature (operation)	-40 °C ... 70 °C
Ambient temperature (storage/transport)	-40 °C ... 85 °C
Altitude	≤ 5000 m (For restrictions, see the manufacturer's declaration for altitude operation)
Permissible humidity (operation)	10 % ... 95 % (non-condensing)
Permissible humidity (storage/transport)	10 % ... 95 % (non-condensing)

Approvals

CE

Certificate	CE-compliant

Wireless approval, Europe

Note	RED 2014/53/EU

Wireless approval USA, FCC

Certificate	Z64-WL18DBMOD
Note	FCC directive, part 15

EMC data

Electromagnetic compatibility	Conformance with RED Directive 2014/53/EU
Noise immunity	EN 61000-6-2

Electrostatic discharge

Standards/regulations	EN 61000-4-2

Electrostatic discharge

Contact discharge	± 6 kV (Test Level 3)
Discharge in air	± 8 kV (Test Level 3)
Comments	Criterion B

Electromagnetic HF field

Standards/regulations	EN 61000-4-3

Electromagnetic HF field

Frequency range	80 MHz ... 3 GHz (Test Level 3)
Field intensity	10 V/m
Comments	Criterion A

Fast transients (burst)

Standards/regulations	EN 61000-4-4

Fast transients (burst)

Input	± 2 kV (Test Level 3)
Signal	± 2 kV (Ethernet)
Comments	Criterion B

Surge current load (surge)

Standards/regulations	EN 61000-4-5

Surge current load (surge)

Input	± 0.5 kV (symmetrical)
	± 1 kV (asymmetrical)
Signal	± 1 kV (Data line, asymmetrical)
Comments	Criterion B

Conducted interference

Standards/regulations	EN 61000-4-6

Conducted interference

Frequency range	0.15 MHz ... 80 MHz
Comments	Criterion A
Voltage	10 V

Emitted interference

Standards/regulations	EN 61000-6-4
Radio interference voltage in acc. with EN 55011	Class B, area of application: Industry and residential
Emitted radio interference in acc. with EN 55011	Class B, area of application: Industry and residential

Criteria

Criterion A	Normal operating behavior within the specified limits.
Criterion B	Temporary impairment to operational behavior that is corrected by the device itself.

Mounting

Mounting type	DIN rail mounting

Drawings

Dimensional drawing

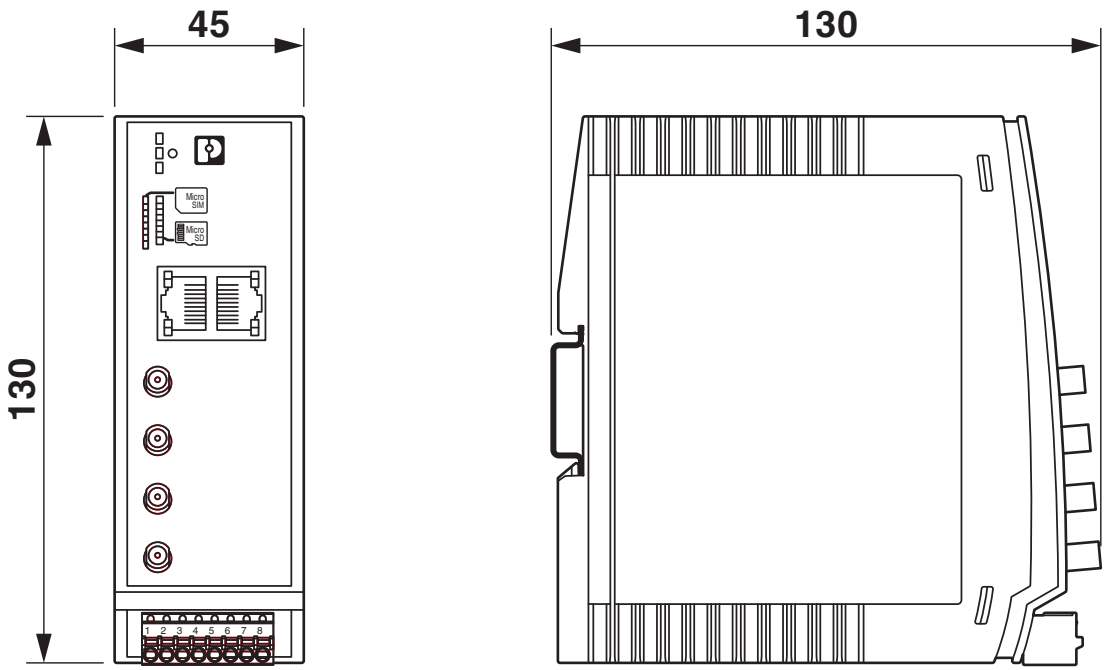

Dimensions

Connection diagram

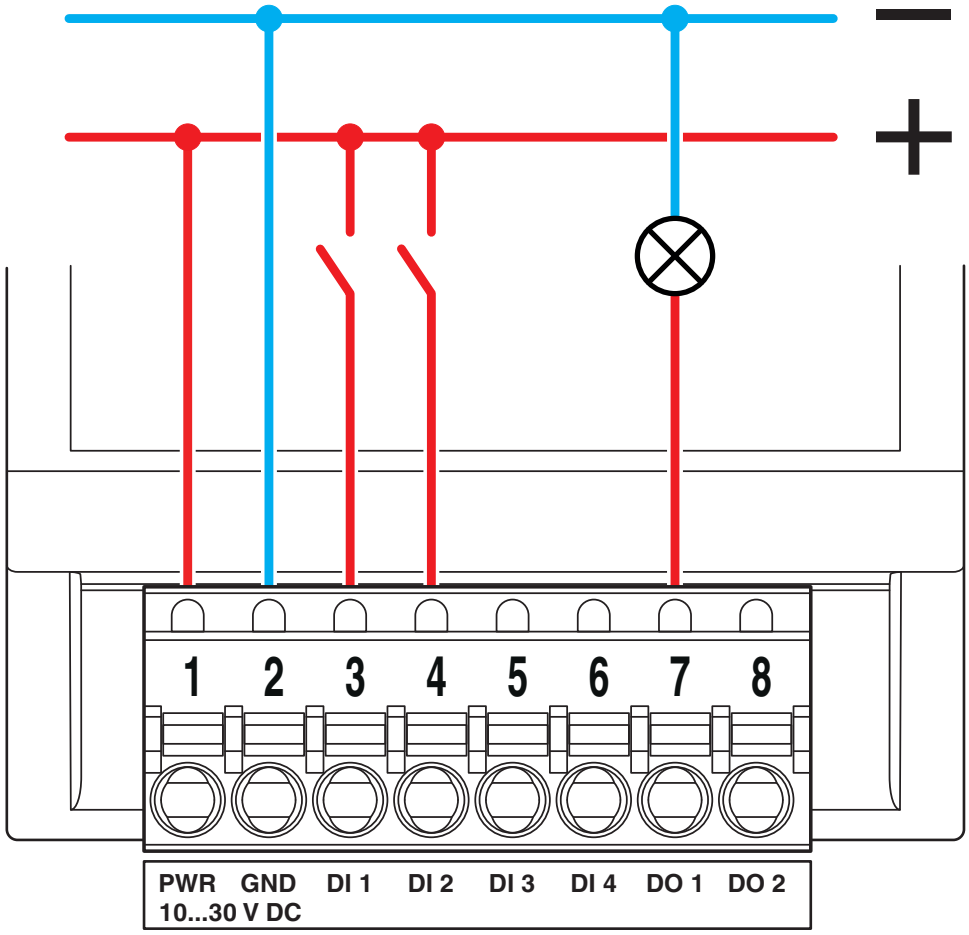

Switching inputs and outputs

Schematic diagram

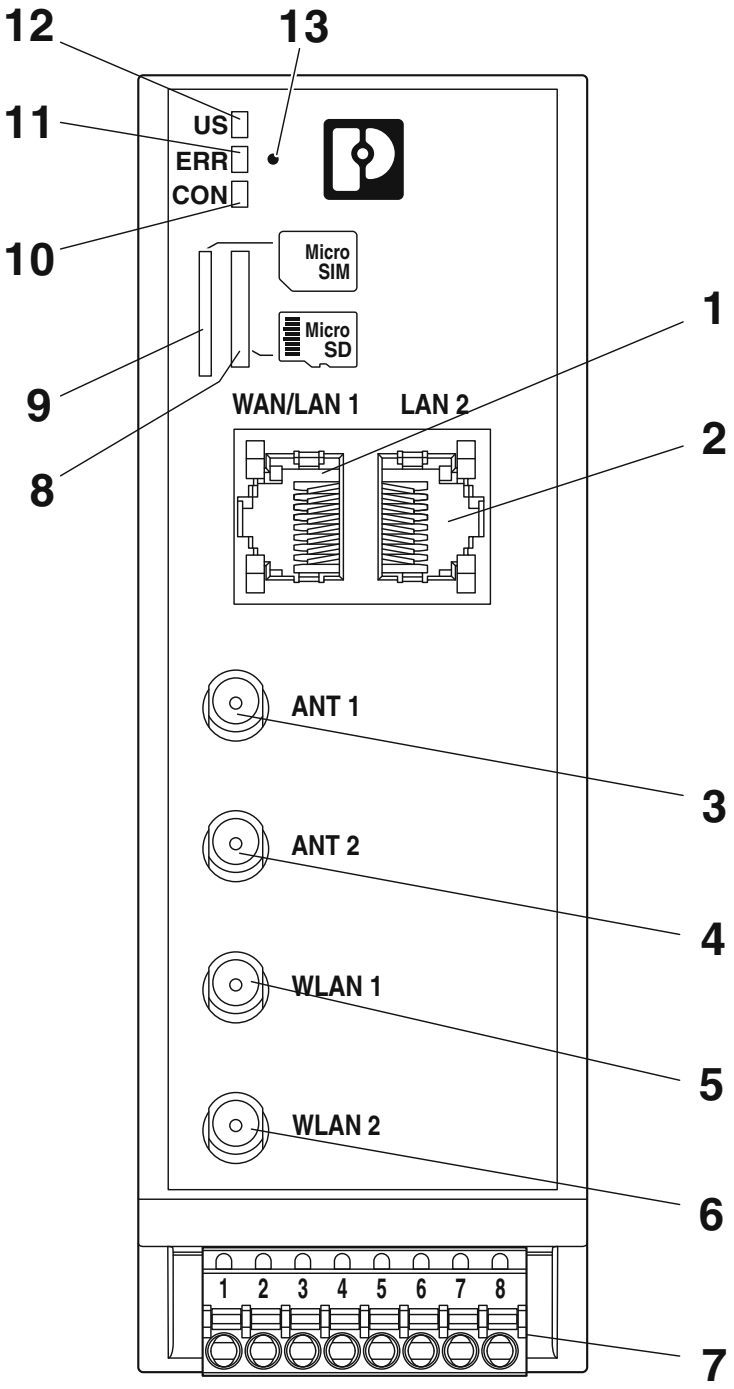

Front view

Schematic diagram

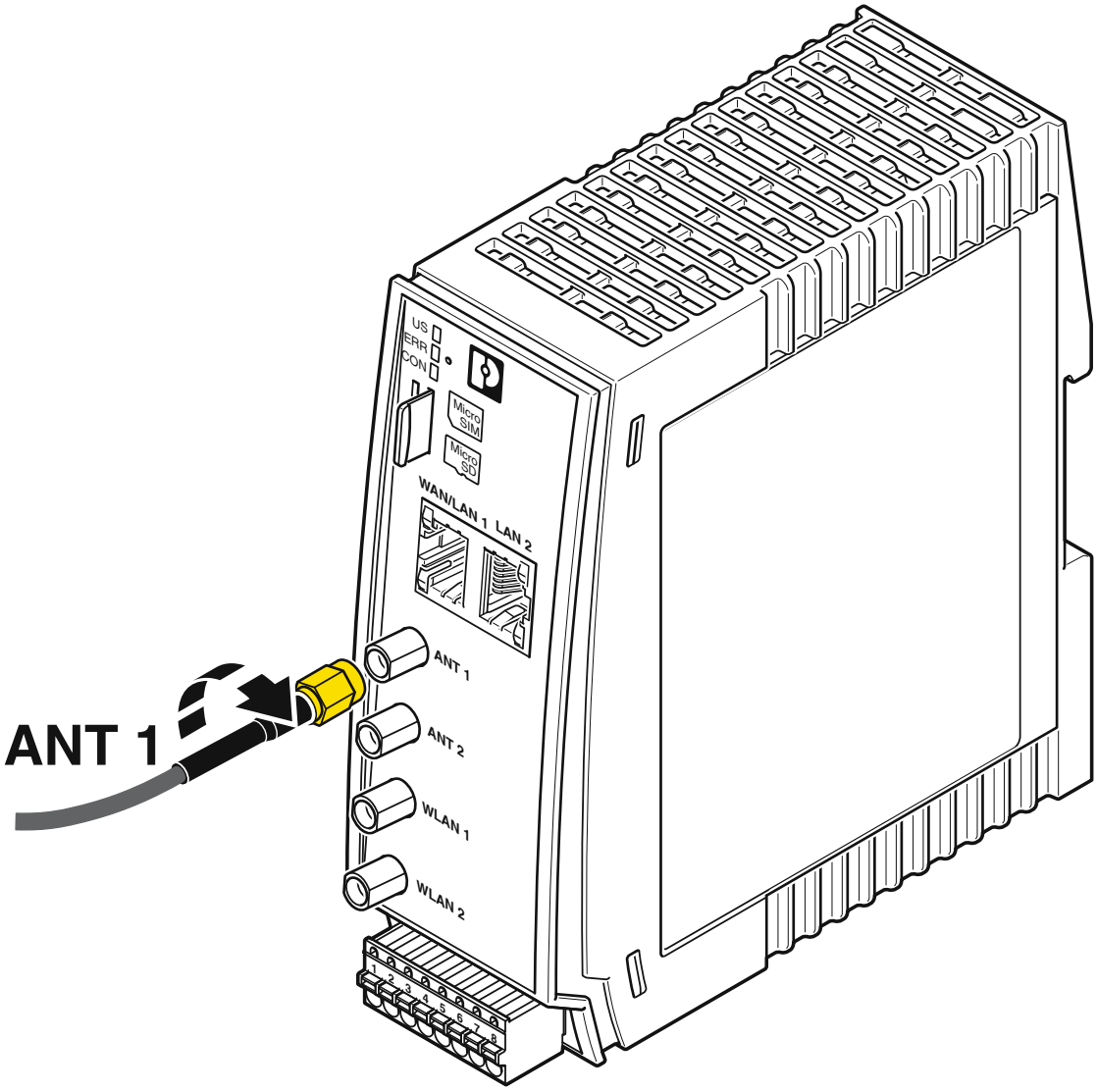

Connect the antenna

Schematic diagram

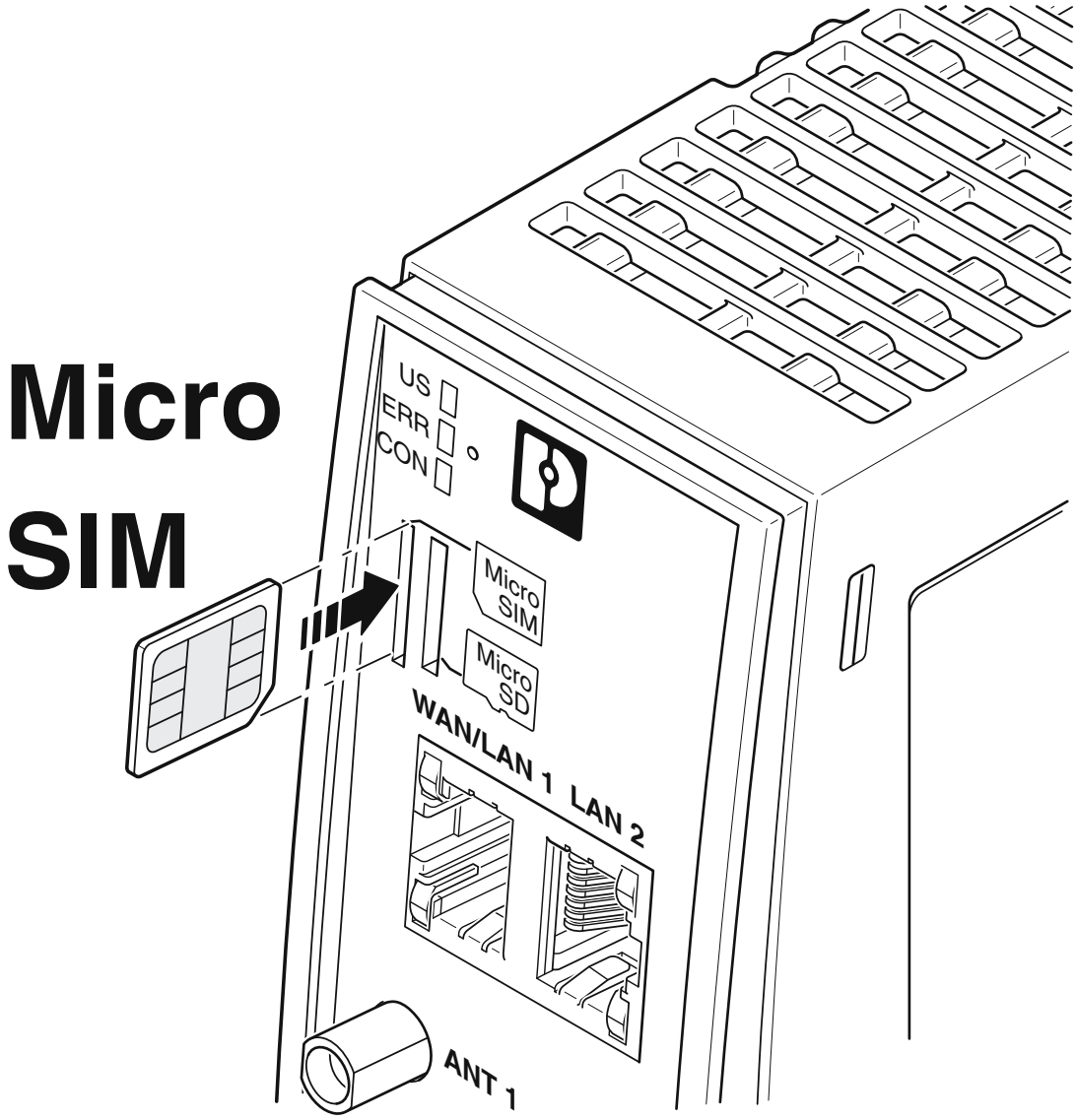

Insert SIM card

Schematic diagram

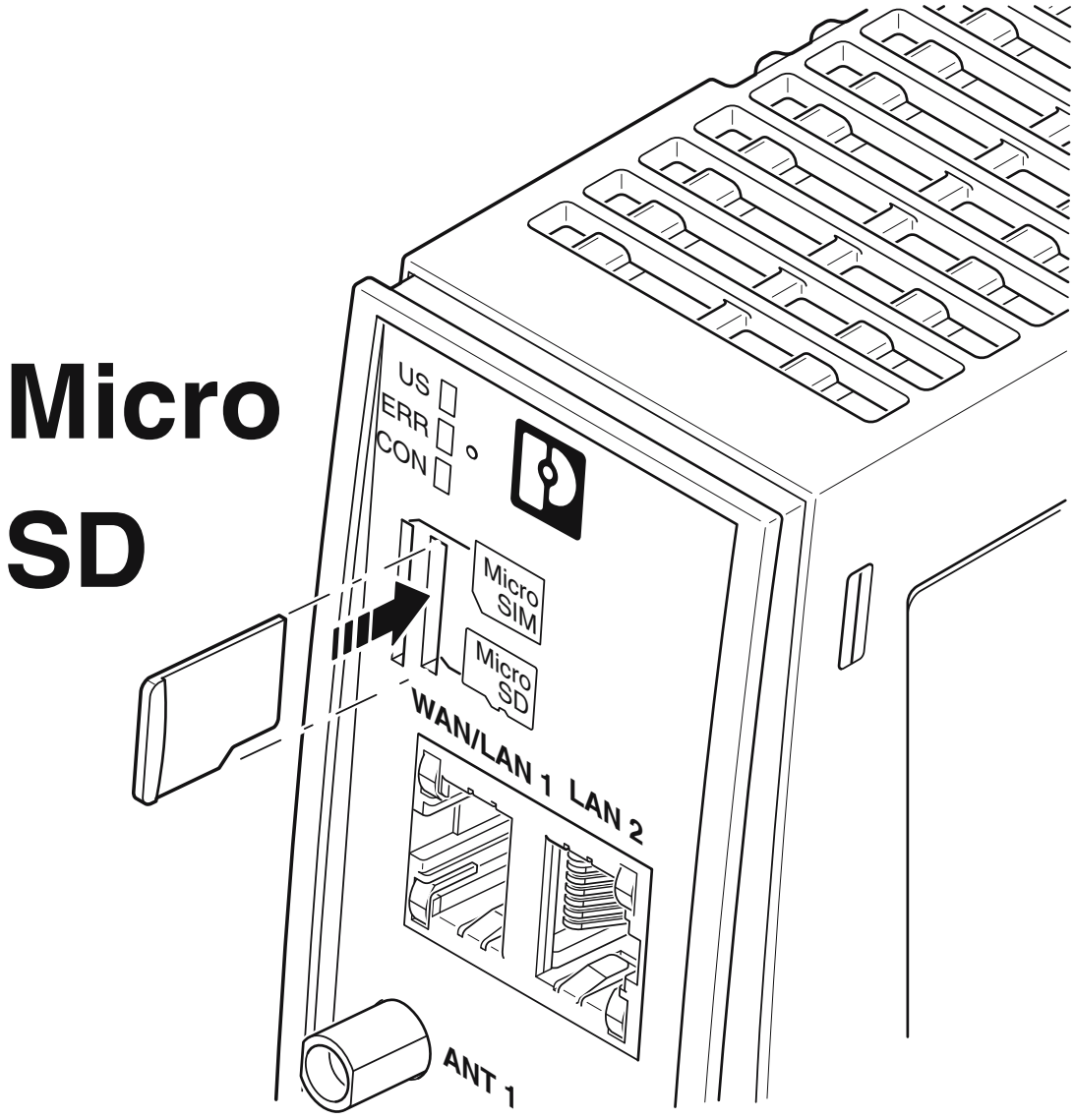

Insert SD card

Schematic diagram

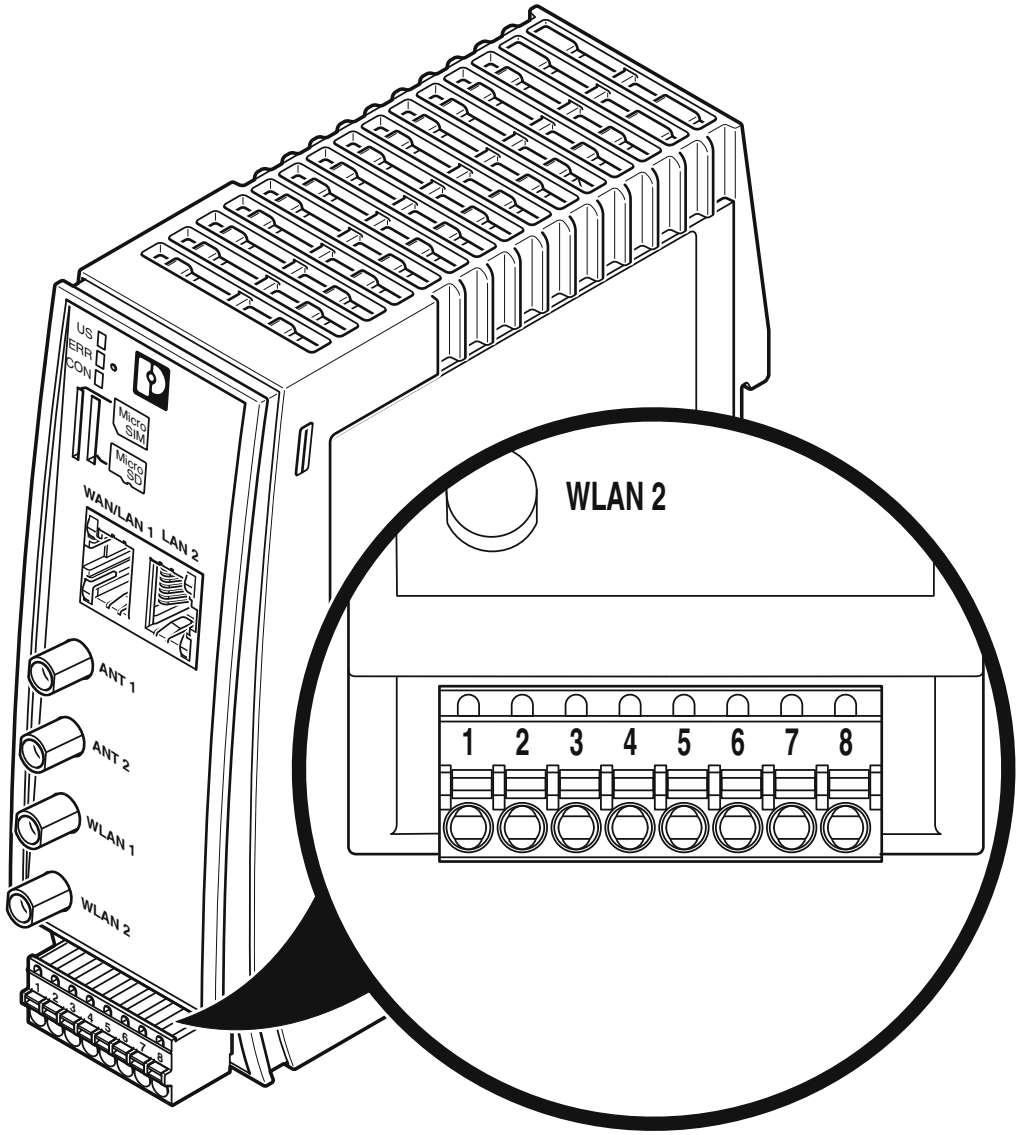

Device connections

Classifications

ECLASS

ECLASS-13.0	19170502
ECLASS-15.0	19170502

ETIM

ETIM 10.0	EC001478

UNSPSC

UNSPSC 21.0	43222600

Environmental product compliance

EU RoHS

Fulfills EU RoHS substance requirements	Yes, No exemptions

China RoHS

Environment friendly use period (EFUP)	EFUP-E
	No hazardous substances above the limits

EU REACH SVHC

REACH candidate substance (CAS No.)	No substance above 0.1 wt%

Phoenix Contact 2026 © - all rights reserved
https://www.phoenixcontact.com

Phoenix Contact USA
586 Fulling Mill Road
Middletown, PA 17057, United States
(+717) 944-1300
info@phoenixcon.com