UCS WM-MP 195-145 7035 - Adapter plate

1225405

https://www.phoenixcontact.com/us/products/1225405

Please be informed that the data shown in this PDF document is generated from our online catalog. Please find the complete data in the user documentation. Our general terms of use for downloads are valid.



Adapter for attaching UCS housings in size 195-145 to the wall, to VESA standard brackets, and to wall outlet boxes, housing is snapped on, material: polycarbonate, color: light gray, similar to RAL 7035

Your advantages

- Flexible in use: Only one bracket for the widest range of applications
- No tools required: UCS housings simply snap on
- Wide range of applications: Use on mounts in accordance with the VESA standard and on cavity sockets with a diameter of 60 mm

Commercial data

Item number	1225405
Packing unit	1 pc
Minimum order quantity	1 pc
Sales key	AC03
Product key	ACFCAZ
GTIN	4063151317638
Weight per piece (including packing)	163.5 g
Weight per piece (excluding packing)	122.9 g
Customs tariff number	84879090
Country of origin	CN

Technical data

Notes

Assembly note	Please observe the assembly instructions available in the download area.

Product properties

Product type	Adapter plate
Housing type	Universal housings
Housing series	UCS
Product family	UCS 195-145

Dimensions

Dimensional drawing	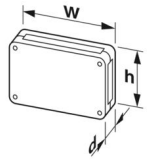
Width	198.3 mm
Height	152.8 mm
Depth	17.9 mm

Material specifications

Color (Housing)	light gray (RAL 7035)
Material	PC
Flammability rating according to UL 94	V0
CTI according to IEC 60112	225
Insulating material	PC

Environmental and real-life conditions

Vibration test

Specification	IEC 60068-2-6:2007-12
Frequency	10 - 150 - 10 Hz
Sweep speed	1 octave/min
Amplitude	0.15 mm (10 Hz ... 58.1 Hz)
Acceleration	2g (58.1 Hz ... 150 Hz)
Test duration per axis	2.5 h
Test directions	X-, Y- and Z-axis

Glow-wire test

Specification	IEC 60695-2-11:2014-02
Temperature	850 °C
Time of exposure	30 s

Thermal stability / ball thrust test

Specification	IEC 60695-10-2:2014-02
Temperature	125 °C
Test duration	1 h
Force	20 N

Mechanical strength / tumbling barrel

Specification	IEC 60068-2-31:2008-05
Height of fall	50 cm
Frequency	50

Shocks

Specification	IEC 60068-2-27:2008-02
Pulse shape	Half-sine
Acceleration	15g
Shock duration	11 ms
Number of shocks per direction	3
Test directions	X-, Y- and Z-axis (pos. and neg.)

Test for substances that would hinder coating with paint or varnish

Specification	VW PV 3.10.7:2005-02
Result	Test passed

Ambient conditions

Ambient temperature (operation)	-40 °C ... 105 °C
Ambient temperature (storage/transport)	-40 °C ... 70 °C
Ambient temperature (assembly)	-5 °C ... 100 °C
Relative humidity (storage/transport)	95 %

Mounting

Mounting type	Screw mounting

Packaging specifications

Type of packaging	Box packaging

Drawings

Dimensional drawing

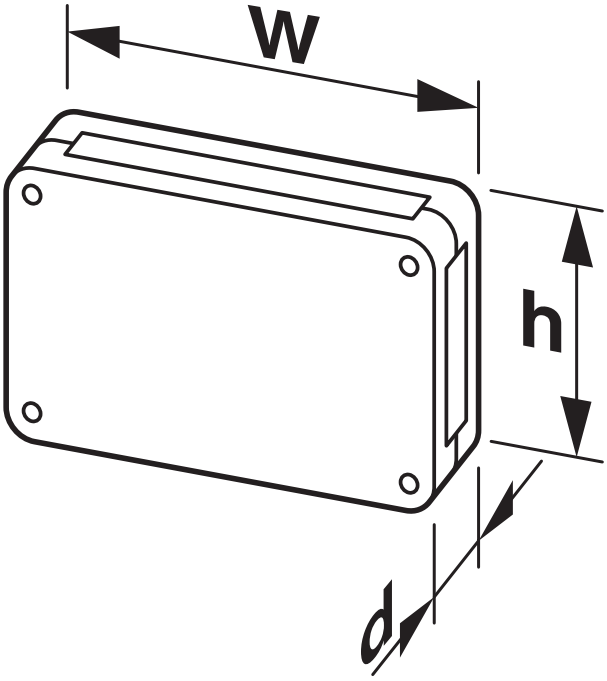

Schematic representation – for additional information, see product range drawing in the Download Center

Approvals

To download certificates, visit the product detail page: https://www.phoenixcontact.com/us/products/1225405

UL Recognized
Approval ID: E240868

Classifications

ECLASS

ECLASS-13.0	27190605
ECLASS-15.0	27190605

ETIM

ETIM 10.0	EC002779

UNSPSC

UNSPSC 21.0	31261500

Environmental product compliance

EU RoHS

Fulfills EU RoHS substance requirements	Yes, No exemptions

China RoHS

Environment friendly use period (EFUP)	EFUP-E
	No hazardous substances above the limits

EU REACH SVHC

REACH candidate substance (CAS No.)	Perfluorobutane sulfonic acid (PFBS) and its salts(CAS: n/a)

EF3.1 Climate Change

CO2e kg	1.159 kg CO2e

Phoenix Contact 2026 © - all rights reserved
https://www.phoenixcontact.com

Phoenix Contact USA
586 Fulling Mill Road
Middletown, PA 17057, United States
(+717) 944-1300
info@phoenixcon.com