PSR-ESS-M0-H100 - Actuator

1221758

https://www.phoenixcontact.com/us/products/1221758

Please be informed that the data shown in this PDF document is generated from our online catalog. Please find the complete data in the user documentation. Our general terms of use for downloads are valid.



Actuator for modular emergency stop switches, for combination with module holder and contact module as a functional unit, panel installation, bayonet lock

Product description

Phoenix Contact emergency stop switches are electromechanical switching devices with a safety function. They are used to safely shut down or stop machines and systems in order to prevent or minimize personal injury and property damage. The portfolio includes a modular system as well as a preconfigured solution. The modular emergency stop switch is comprised of the following components: - PSR-ESS-M0-H100 /...110 / ...120 actuator - PSR-ESS-ACC-CB1-C... module holder - PSR-ESS-ACC-CB1-NC-SC or PSR-ESS-ACC-CB1-SM-SC safe contact module Further contact modules can be combined if required.

Your advantages

- Modular system allows an efficient solution for individual applications
- Bayonet lock allows tool-free connection with the actuator
- Rapid on-site diagnostics with color-coded switching position indicator

ELEKTROGERÄTE RÜCKNAHME

Commercial data

Item number	1221758
Packing unit	1 pc
Minimum order quantity	1 pc
Sales key	DN04
Product key	DNA621
GTIN	4063151310295
Weight per piece (including packing)	60 g
Weight per piece (excluding packing)	54 g

Customs tariff number	85365080
Country of origin	DE

Technical data

Notes

Note on application

Note on application	Only for industrial use

Product properties

Product type	Actuator
Product family	Modular emergency stop switches

Electrical properties

Mechanical service life	50,000 switching cycles

Dimensions

Dimensional drawing	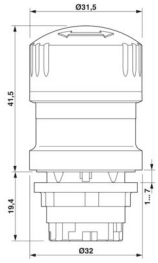
Depth	60.9 mm
Diameter	31.5 mm

Material specifications

Color (Mushroom head button)	red (RAL 3001)
Color (Front frame)	yellow (RAL 1018)
Flammability rating according to UL 94	V2
Housing material	PA

Environmental and real-life conditions

Ambient conditions

Degree of protection	IP65/IP67/IP69K (with professional installation in the appropriate installation space)
Ambient temperature (operation)	-30 °C ... 70 °C
Ambient temperature (storage/transport)	-50 °C ... 85 °C
Maximum altitude	max. 2000 m (Above sea level)
Shock	15g / 11 ms, in accordance with IEC 60068-2-27
Vibration (operation)	10 Hz ... 500 Hz, 0.35 mm amplitude, 5g, in accordance with IEC 60068-2-6

Mounting

Mounting type	Panel mount
Assembly note	Mounting nut torque: max. 2.5 Nm
Mounting position	any
Mounting hole diameter	22.30 mm

Drawings

Dimensional drawing

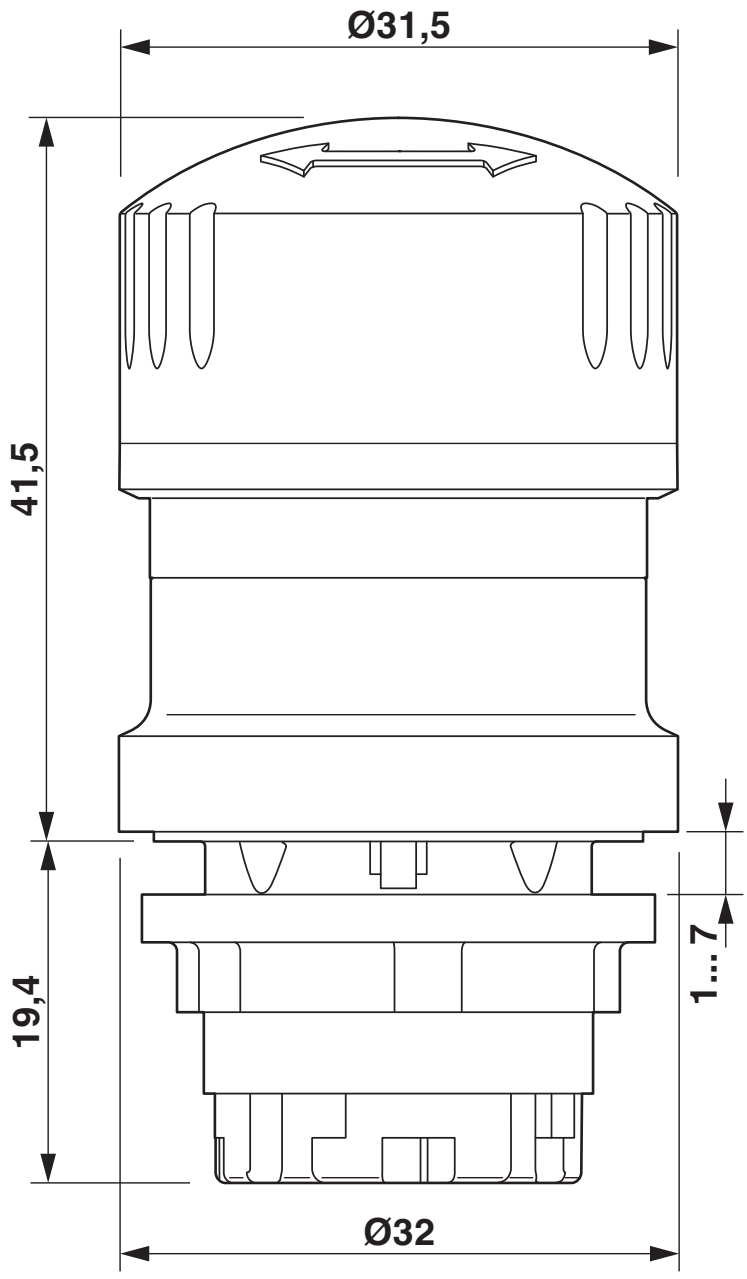

Dimensions (in mm)

Approvals

To download certificates, visit the product detail page: https://www.phoenixcontact.com/us/products/1221758

UL Recognized
Approval ID: E519465

UL Listed
Approval ID: E140324

cUL Listed
Approval ID: E140324

Functional Safety
Approval ID: B 029429 0031 Rev01

Classifications

ECLASS

ECLASS-13.0	27371212
ECLASS-15.0	27371212

ETIM

ETIM 10.0	EC001038

UNSPSC

UNSPSC 21.0	39122200

Environmental product compliance

EU RoHS

Fulfills EU RoHS substance requirements	Yes, No exemptions

China RoHS

Environment friendly use period (EFUP)	EFUP-E
	No hazardous substances above the limits

EU REACH SVHC

REACH candidate substance (CAS No.)	No substance above 0.1 wt%

EF3.1 Climate Change

CO2e kg	1.393 kg CO2e

Phoenix Contact 2026 © - all rights reserved
https://www.phoenixcontact.com

Phoenix Contact USA
586 Fulling Mill Road
Middletown, PA 17057, United States
(+717) 944-1300
info@phoenixcon.com