PSR-ESS-M0-H220-2001-C - Emergency stop switch

1221739

https://www.phoenixcontact.com/us/products/1221739

Please be informed that the data shown in this PDF document is generated from our online catalog. Please find the complete data in the user documentation. Our general terms of use for downloads are valid.



Emergency stop switch, in conjunction with appropriate evaluation unit suitable for use up to PL e (EN ISO 13849-1), SIL 3 (EN IEC 62061), lighting to indicate the ready state, panel installation, spade connection

Product description

Phoenix Contact emergency stop switches are electromechanical switching devices with a safety function. They are used to safely shut down or stop machines and systems in order to prevent or minimize personal injury and property damage. The portfolio includes a modular system as well as a preconfigured solution. The preconfigured emergency stop switch is ready for immediate use and is connected via a spade connector. Thanks to its compact design, the emergency stop switch can be used flexibly and can be installed in a wide range of control points. If necessary, the emergency stop switch can be disabled for machines or system parts that are switched off and are not ready.

Your advantages

- Flexible use, thanks to compact design
- Easy connection with spade connector
- Rapid on-site diagnostics with color-coded switching position indicator
- In applications with appropriate evaluation device suitable for use up to PL e (EN ISO 13849-1), SIL 3 (EN IEC 62061)
- Increased occupational safety with illuminated active/inactive status indicator

ELEKTROGERÄTE RÜCKNAHME

Commercial data

Item number	1221739
Packing unit	1 pc
Minimum order quantity	1 pc
Sales key	DN04
Product key	DNA621
GTIN	4063151310448

Weight per piece (including packing)	45.5 g
Weight per piece (excluding packing)	43.2 g
Customs tariff number	85365080
Country of origin	DE

Technical data

Notes

Note on application

Note on application	Only for industrial use

Product properties

Product type	Emergency stop switch

Insulation characteristics

Overvoltage category	II
Pollution degree	2

Electrical properties

Rated surge voltage	2.5 kV

Contact information

Contact switching type	2 force-guided N/C contacts
Contact material	AgNi
Positive opening action	in accordance with EN 60947-5-1, Annex K
Voltage	max. (see load limit current)
Current	max. (see load limit current)
Electrical service life	50,000 switching cycles
Mechanical service life	50,000 switching cycles
Bouncing time	< 10 ms

Load limit current in accordance with IEC/EN 60947-5-1

Standard	IEC/EN 60947-5-1
Utilization category	AC15
Rated insulation voltage U_i	250 V
Rated operating voltage U_e	35 V
Rated operating current I_e	5 A
Switching capacity	10x I_e
Utilization category	DC13
Rated insulation voltage U_i	250 V
Rated operating voltage U_e	35 V
Rated operating current I_e	3 A
Switching capacity	1.1x I_e

Lighting

Supply voltage	2 V
Supply current	max. 30 mA (recommended: 15 mA ... 20 mA)
Resistance	0 Ω (external series resistor required, e.g., 1.2 kΩ, 1 W at 24 V)

Connection data

Connection method	Spade connection

Dimensions

Dimensional drawing	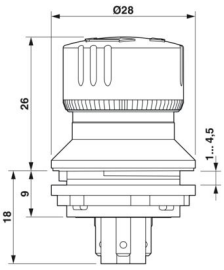
Depth	44 mm
Diameter	28 mm

Material specifications

Color (Mushroom head button, illuminated)	red (RAL 3001)
Color (Mushroom head button)	gray (RAL 7042)
Color (Front frame)	yellow (RAL 1018)
Flammability rating according to UL 94	V2 (Actuator)
	V0 (Contact element)
Housing material	PA/PC

Environmental and real-life conditions

Ambient conditions

Degree of protection	IP65/IP67 (with professional installation in the appropriate installation space)
Ambient temperature (operation)	-25 °C ... 70 °C
Ambient temperature (storage/transport)	-40 °C ... 80 °C
Maximum altitude	max. 2000 m (Above sea level)
Shock	15g / 11 ms, in accordance with IEC 60068-2-27
Vibration (operation)	10 Hz ... 500 Hz, 0.35 mm amplitude, 5g, in accordance with IEC 60068-2-6

Mounting

Mounting type	Panel mount
Assembly note	Mounting nut torque: 1.3 Nm … 1.9 Nm
Mounting position	any

Drawings

Dimensional drawing

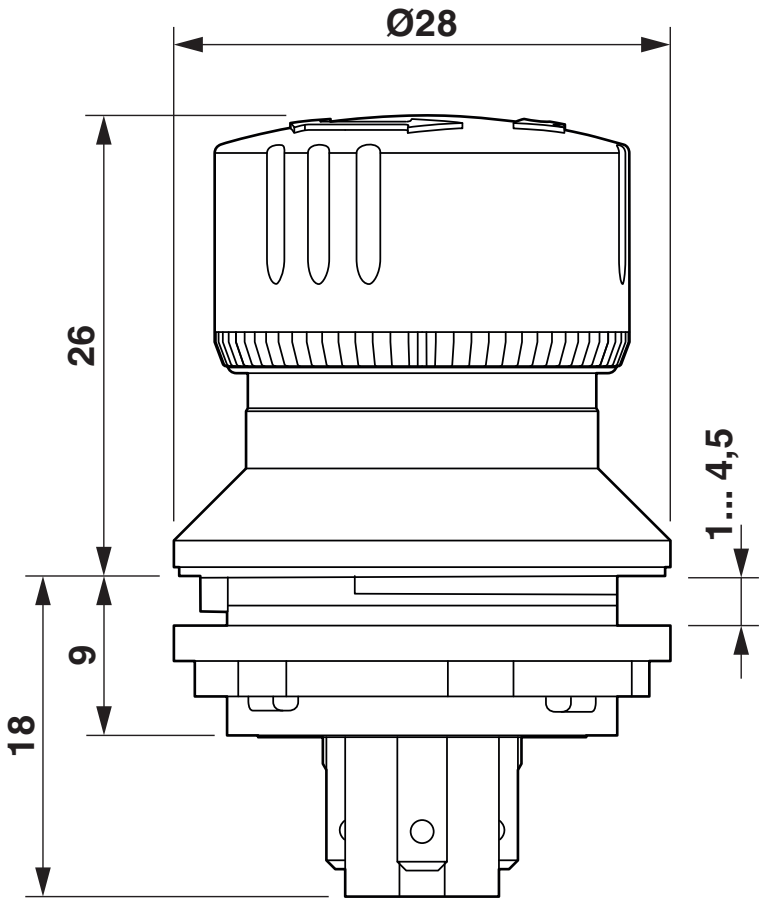

Dimensions (in mm)

Approvals

To download certificates, visit the product detail page: https://www.phoenixcontact.com/us/products/1221739

cUL Recognized
Approval ID: E519465

UL Recognized
Approval ID: E519465

Functional Safety
Approval ID: B 029429 0031 Rev01

EAC
Approval ID: RU*DE*B*00073/21

Classifications

ECLASS

ECLASS-13.0	27371216
ECLASS-15.0	27371216
ECLASS-15.0 ASSET	27250101

ETIM

ETIM 10.0	EC000225

UNSPSC

UNSPSC 21.0	39122200

Environmental product compliance

EU RoHS

Fulfills EU RoHS substance requirements	Yes, No exemptions

China RoHS

Environment friendly use period (EFUP)	EFUP-E
	No hazardous substances above the limits

EU REACH SVHC

REACH candidate substance (CAS No.)	No substance above 0.1 wt%

EF3.1 Climate Change

CO2e kg	3.429 kg CO2e

Phoenix Contact 2026 © - all rights reserved
https://www.phoenixcontact.com

Phoenix Contact USA
586 Fulling Mill Road
Middletown, PA 17057, United States
(+717) 944-1300
info@phoenixcon.com