PSR-SCP-24DC/ESD/4X1/30-SET35 - Safety relays

1217839

https://www.phoenixcontact.com/us/products/1217839

Please be informed that the data shown in this PDF document is generated from our online catalog. Please find the complete data in the user documentation. Our general terms of use for downloads are valid.



Figure shows an item with Phoenix Contact logo

Set of 35 safety relays for emergency stop and safety door monitoring up to SIL 3 or Cat. 4, PL e in accordance with EN ISO 13849, automatic or manual activation, 2 N/O contacts with a dropout delay of 0.1 s to 30 s, plug-in screw connection terminal block

Your advantages

- Manually monitored and automatic activation
- For emergency stop and safety door monitoring, plus evaluation of light grids
- 1- and 2-channel control
- Fixed delay times of 0.1 s ... 300 s
- Protective labels to prevent manipulation of the set time (PSR-ESD-300) or electronic protection against manipulation (PSR-ESD-30)
- Maximum of 3 undelayed and 2 dropout delay contacts
- Up to Cat. 4/PL e in accordance with ISO 13849-1, SIL 3 in accordance with EN IEC 62061, SIL 3 in accordance with IEC 61508

ELEKTROGERÄTE RÜCKNAHME

Commercial data

Item number	1217839
Packing unit	1 pc
Minimum order quantity	1 pc
Product key	DNA131
GTIN	4063151300982
Weight per piece (including packing)	6,333 g
Weight per piece (excluding packing)	6,333 g
Country of origin	DE

Set consists of

PSR-SCP- 24DC/ESD/4X1/30 - Safety relays

2981800

https://www.phoenixcontact.com/us/products/2981800



Safety relay for emergency stop and safety door monitoring up to SIL 3 or Cat. 4, PL e in accordance with EN ISO 13849, automatic or manual activation, 2 N/O contacts with a dropout delay of 0.1 s ... 30 s, plug-in screw connection terminal block

Technical data

Notes

Note on application

Note on application	Only for industrial use

Product properties

Product type	Safety relays
Product family	PSRclassic
Application	Emergency stop
	Safety door
	Light grid
Control	1 and 2 channel
Mechanical service life	approx. 10^7 cycles
Relay type	Electromechanical relay with force-guided contacts in accordance with IEC/EN 61810-3

Insulation characteristics

Overvoltage category	II
Degree of pollution	2

Times

Typical response time	150 ms (Monitored/manual and auto-start)
Typical release time	20 ms (Undelayed contacts)
	100 ms (delayed contacts)
Delay time range	0.1 s ... 30 s ±30 % (adjustable)
Recovery time	330 ms (Restart)
	1 s (Electric torque)

Electrical properties

Maximum power dissipation for nominal condition	1.8 W
Nominal operating mode	100% operating factor
Rated insulation voltage	250 V
Rated surge voltage/insulation	4 kV / basic insulation

Supply

Rated control circuit supply voltage U_S	24 V DC
Inrush current	typ. 250 mA

Input data

General

Nominal input voltage U_N	24 V DC
Input voltage range in reference to U_N	0.85 ... 1.1
Typical input current at U_N	75 mA DC

Voltage at input/start and feedback circuit	approx. 24 V DC
Typical response time	150 ms (Monitored/manual and auto-start)
Typical release time	20 ms (Undelayed contacts)
	100 ms (delayed contacts)
Typical release time range	0.1 s ... 30 s
Recovery time	330 ms (Restart)
	1 s (Electric torque)
Protective circuit	Suppressor diode, 33 V DC
Max. permissible overall conductor resistance	500 Ω (Input and reset circuit at U_N)
Operating voltage display	Green LED
Status display	LED K1/K2 and K3(t)/K4(t), green

Output data

Contact switching type	4 enabling current paths
Contact material	$AgSnO_2$
Maximum switching voltage	250 V AC/DC
Minimum switching voltage	15 V AC/DC
Limiting continuous current	6 A (N/O contact)
Maximum inrush current	6 A
Inrush current, minimum	25 mA
Sq. Total current	120 A^2 (see to derating)
Interrupting rating (ohmic load) max.	144 W (24 V DC, τ = 0 ms)
	288 W (48 V DC, τ = 0 ms)
	90 W (110 V DC, τ = 0 ms)
	88 W (220 V DC, τ = 0 ms)
	1500 VA (250 V AC, τ = 0 ms)
Maximum interrupting rating (inductive load)	42 W (24 V DC, τ = 40 ms)
	33 W (48 V DC, τ = 40 ms)
	25 W (110 V DC, τ = 40 ms)
	23 W (220 V DC, τ = 40 ms)
Switching power min.	0.4 W
Switching capacity (360/h cycles)	on request
Switching capacity (3600/h cycles)	3 A (24 V (DC13))
	3 A (230 V (AC15))
Output fuse	10 A gL/gG NEOZED (N/O contact)

Relay: Enabling current paths

Number of outputs	4
Contact material	$AgSnO_2$
Switching voltage	max. 250 V AC/DC
	min. 15 V AC/DC
Switching power	min. 0.4 W
Inrush current	max. 6 A
Limiting continuous current	6 A

Sq. Total current	49 A^2
Interrupting rating (ohmic load) max.	144 W (24 V DC, τ = 0 ms)
	288 W (48 V DC, τ = 0 ms)
	90 W (110 V DC, τ = 0 ms)
	88 W (220 V DC, τ = 0 ms)
	1500 VA (250 V AC, τ = 0 ms)
Maximum interrupting rating (inductive load)	42 W (24 V DC, τ = 40 ms)
	33 W (48 V DC, τ = 40 ms)
	25 W (110 V DC, τ = 40 ms)
	23 W (220 V DC, τ = 40 ms)

Connection data

Connection technology

pluggable	yes

Conductor connection

Connection method	Screw connection
Conductor cross-section, rigid	0.2 mm² ... 2.5 mm²
Conductor cross-section, flexible	0.2 mm² ... 2.5 mm²
Conductor cross-section AWG	24 ... 12
Stripping length	7 mm
Screw thread	M3

Signaling

Status display	LED (green)
Error indication	K1/K2 and K3(t)/K4(t) LED, green

Dimensions

Width	22.5 mm
Height	99 mm
Depth	114.5 mm

Material specifications

Color	yellow (RAL 1018)
Housing material	PA

Characteristics

Safety data

Stop category (EN 60204-1)	0 (Undelayed contacts)
Stop category	1 (delayed contacts)

Safety data: EN ISO 13849

Performance level (PL)	e

Safety data

Safety Integrity Level (SIL)	3

Safety data

Safety Integrity Level (SIL)	3

Environmental and real-life conditions

Ambient conditions

Degree of protection	IP20
Min. degree of protection of inst. location	IP54
Ambient temperature (operation)	-20 °C ... 45 °C
Ambient temperature (storage/transport)	-40 °C ... 70 °C
Maximum altitude	≤ 2000 m (Above sea level)
Max. permissible humidity (storage/transport)	75 % (on average, 85% infrequently, non-condensing)
Max. permissible relative humidity (operation)	75 % (on average, 85% infrequently, non-condensing)
Shock	15g
Vibration (operation)	10 Hz ... 150 Hz, 2g

Mounting

Mounting type	DIN rail mounting
Mounting position	any

Drawings

Circuit diagram

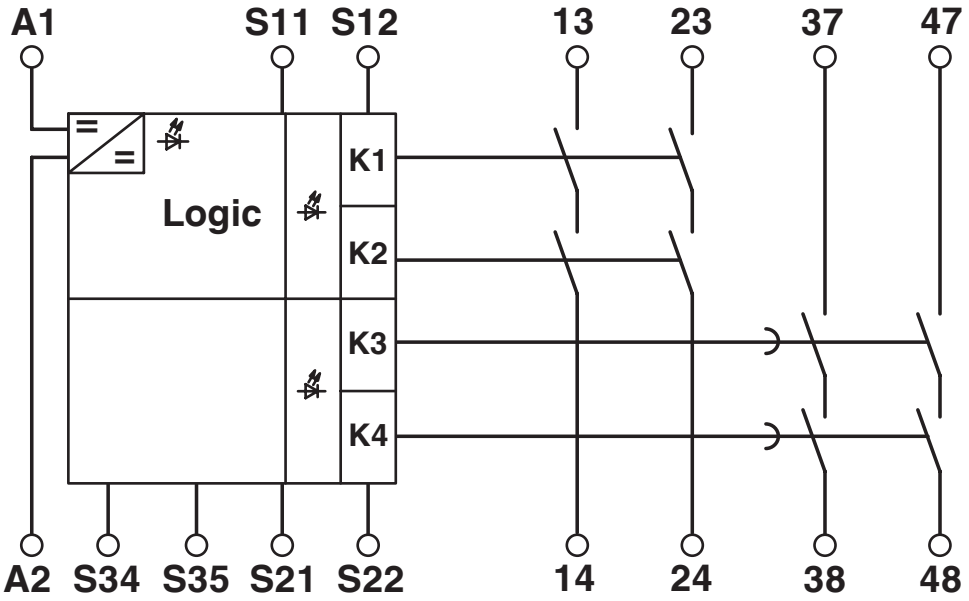

Circuit diagram

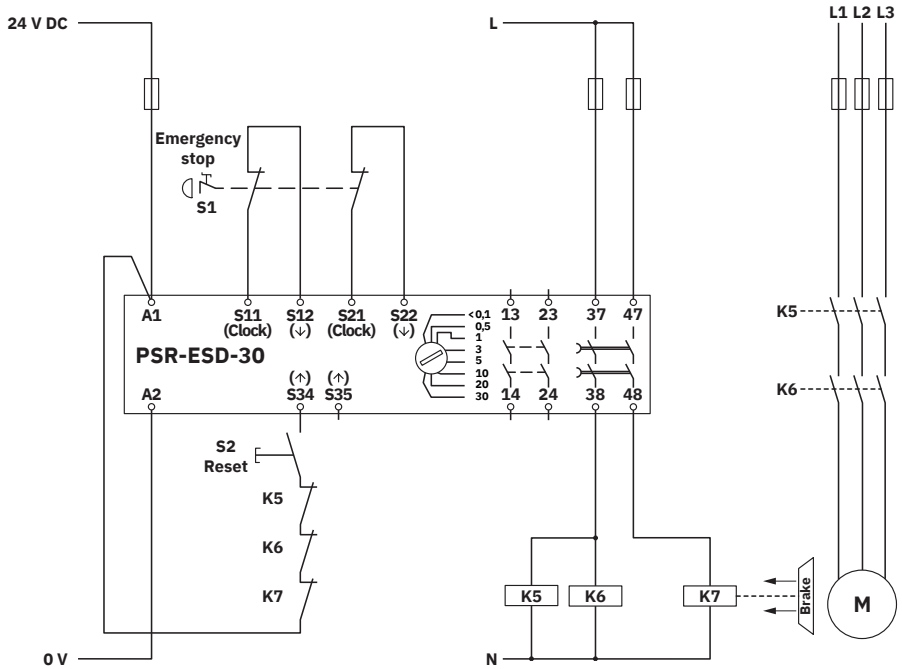

2-channel emergency stop monitoring

Circuit diagram

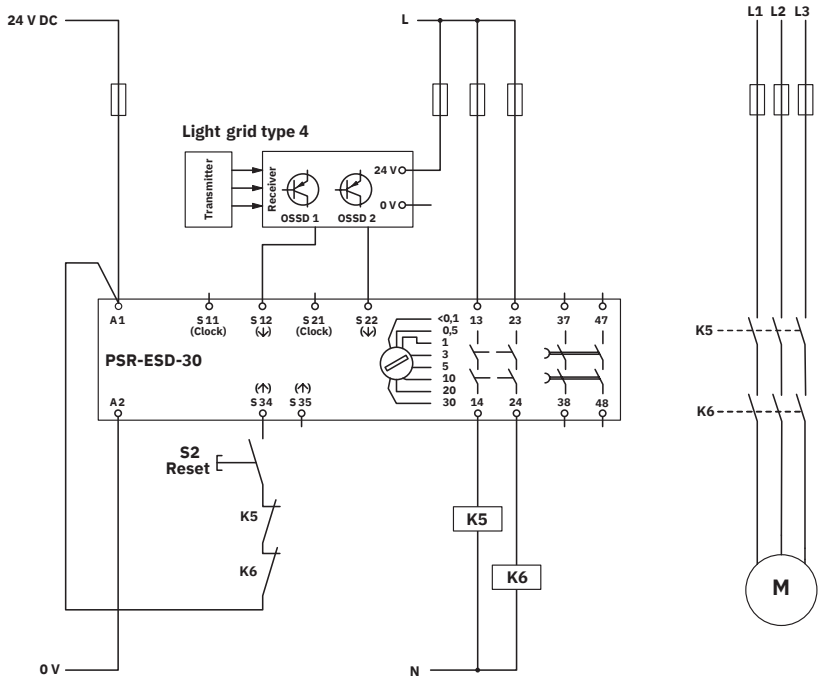

Light grid monitoring

Circuit diagram

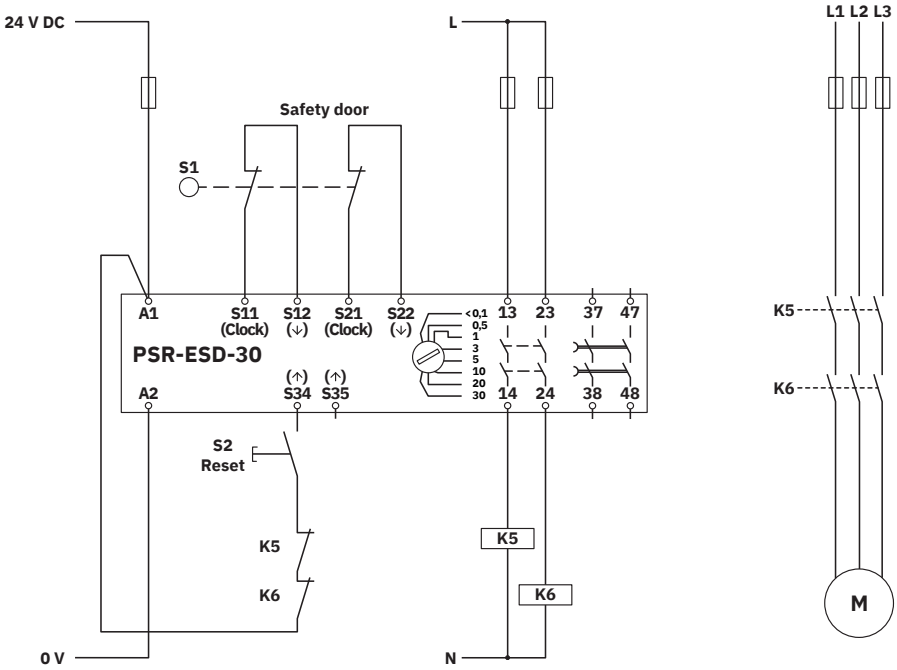

Two-channel safety door monitoring

Approvals

To download certificates, visit the product detail page: https://www.phoenixcontact.com/us/products/1217839

cULus Listed
Approval ID: E140324

Functional Safety
Approval ID: 01/205/0656.04/23

Functional Safety
Approval ID: 968/EZ322.06/23

Classifications

ECLASS

ECLASS-13.0	27371819
ECLASS-15.0	27371819

ETIM

ETIM 10.0	EC001449

UNSPSC

UNSPSC 21.0	39122200

Environmental product compliance

EU RoHS

Fulfills EU RoHS substance requirements	Yes
Exemption	34, 7(a), 7(a)-I, 7(c)-I

China RoHS

Environment friendly use period (EFUP)	EFUP-50
	An article-related China RoHS declaration table can be found in the download area for the respective article under "Manufacturer declaration". For all articles with EFUP-E, no China RoHS declaration table issued and required.

EU REACH SVHC

REACH candidate substance (CAS No.)	1-Methyl-2-pyrrolidone (NMP)(CAS: 872-50-4)
	Lead(CAS: 7439-92-1)
SCIP	19a620c8-b2cf-4183-85bc-2ea025fb8108

Phoenix Contact 2026 © - all rights reserved
https://www.phoenixcontact.com

Phoenix Contact USA
586 Fulling Mill Road
Middletown, PA 17057, United States
(+717) 944-1300
info@phoenixcon.com