AXL P BK ETH - Bus coupler

1213488

https://www.phoenixcontact.com/us/products/1213488

Please be informed that the data shown in this PDF document is generated from our online catalog. Please find the complete data in the user documentation. Our general terms of use for downloads are valid.



Axioline P, Bus coupler, Modbus/TCP, RJ45 jack, transmission speed in the local bus: 100 Mbps, degree of protection: IP20, including bus base module and connectors

Product description

The bus coupler is intended for use within a Modbus/TCP network. The bus coupler creates the link to the Axioline P I/O system and the industrial I/O signals connected to it. Up to 22 Axioline P I/O modules can be connected to the bus coupler.

Your advantages

- 2 Ethernet ports (with integrated switch)
- Transmission speed of 100 Mbps
- Web-based management
- Firmware can be updated through Web-based manager
- Configuring the connected Axioline P I/O modules via web-based management
- Hot-swappable
- Bus coupler redundancy available with a second AXL P BK ETH
- Redundancy manager function block library available in PLCnext Engineer
- High temperature operating range

Commercial data

Item number	1213488
Packing unit	1 pc
Minimum order quantity	1 pc
Sales key	DR06
Product key	DRIP1B
GTIN	4063151284497
Weight per piece (including packing)	325 g
Weight per piece (excluding packing)	191.2 g
Customs tariff number	85176200
Country of origin	TW

Technical data

Dimensions

Dimensional drawing	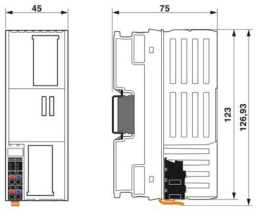
Width	45 mm
Height	126.93 mm
Depth	75 mm
Note on dimensions	The depth applies when a TH 35-7.5 DIN rail is used (in accordance with EN 60715).

Notes

Note on application

Note on application	Only for industrial use

Utilization restriction

CCCex note	Use in potentially explosive areas is not permitted in China.

Mounting

Mounting type	DIN rail mounting
Mounting position	any (observe temperature derating)

Material specifications

Color (Housing)	gray (RAL 7042)

Interfaces

Supported protocols	Modbus/TCP
	HTTP
	BootP
	DHCP

Modbus/TCP

Number of interfaces	2
Connection method	RJ45 jack
Note on the connection method	Auto negotiation and autocrossing
Transmission speed	100 Mbps (full duplex)
Transmission physics	Ethernet in RJ45 twisted pair

Axioline P local bus

Number of interfaces	1

Connection method	Bus base module
Transmission speed	100 Mbps

System properties

System limits

Number of supported devices	max. 22 (per station)

Product properties

Product type	I/O component
Product family	Axioline P
Type	block modular
Mounting position	any (observe temperature derating)
Scope of supply	including bus base module and connectors

Insulation characteristics

Overvoltage category	II (IEC 60664-1, EN 60664-1)
Pollution degree	2 (IEC 60664-1, EN 60664-1)

Electrical properties

Maximum power dissipation for nominal condition	5 W

Potentials: Supply of the bus coupler (U_L)

Supply voltage	24 V DC
Supply voltage range	19.2 V DC ... 30 V DC (including all tolerances, including ripple)
Current draw	max. 4.15 A (19.2 V DC)
	typ. 125 mA (24 V DC)
Protective circuit	Surge protection; electronic
	Reverse polarity protection; electronic

Potentials: Axioline P local bus supply (U_{Bus})

Supply voltage	5 V DC (via bus base module)
Power supply unit	max. 3 A (via bus base module)

Electrical isolation/isolation of the voltage ranges

Test voltage: Ethernet interface 1 / Ethernet interface 2	1500 V AC, 50 Hz, 1 min
Test voltage: Ethernet interface 1 / 24 V communications voltage (U_L) feed-in	1500 V AC, 50 Hz, 1 min
Test voltage: Ethernet interface 2 / 24 V communications voltage (U_L) feed-in	1500 V AC, 50 Hz, 1 min
Test voltage: Ethernet interface 1 / functional ground	1500 V AC, 50 Hz, 1 min
Test voltage: Ethernet interface 2 / functional ground	1500 V AC, 50 Hz, 1 min
Test voltage: 24 V communications voltage (U_L) feed-in / functional ground	500 V AC, 50 Hz, 1 min

Connection data

Connection technology

Connection name	Power supply
Note on the connection method	Please observe the information provided on conductor cross-sections in the “Axioline P: System and installation” user manual.

Power supply

Connection method	Push-in connection
Note on the connection method	Please observe the information provided on conductor cross-sections in the “Axioline P: System and installation” user manual.
Conductor cross-section, rigid	0.2 mm² ... 1.5 mm²
Conductor cross-section, flexible	0.2 mm² ... 1.5 mm²
Conductor cross-section AWG	24 ... 16
Stripping length	8 mm

Environmental and real-life conditions

Ambient conditions

Ambient temperature (operation)	-40 °C ... 70 °C (Mounting position: panel mounting on horizontal DIN rail)
	-40 °C ... 50 °C (Mounting position: any)
Degree of protection	IP20
Air pressure (operation)	70 kPa ... 106 kPa (up to 2000 m above sea level)
Air pressure (storage/transport)	70 kPa ... 106 kPa (up to 2000 m above sea level)
Ambient temperature (storage/transport)	-40 °C ... 85 °C
Permissible humidity (operation)	5 % ... 95 % (non-condensing)
Permissible humidity (storage/transport)	5 % ... 95 % (non-condensing)

Mechanical test

Vibration resistance in accordance with EN 60068-2-6/IEC 60068-2-6	2g
Shock in accordance with EN 60068-2-27/IEC 60068-2-27	15g
Continuous shock in accordance with EN 60068-2-27/IEC 60068-2-27	10g

Standards and regulations

Protection class	III (IEC 61140, EN 61140, VDE 0140-1)

Approvals

ATEX

Identification	Ⓔx II 3 G Ex ec IIC T4 Gc
Certificate	IBExU 18ATEXB018 X

IECEx

Identification	Ex ec IIC T4 Gc
Certificate	IECEx IBE 18.0023X

UKCA Ex (UKEX)

Identification	II 3G Ex ec IIC T4 Gc X
Certificate	PxCAI22UKEx2316390X

Ex data

UL, USA / Canada	Class I, Div. 2, Groups A, B, C, D T4 Class I, Zone 2, IIC T4

Drawings

Dimensional drawing

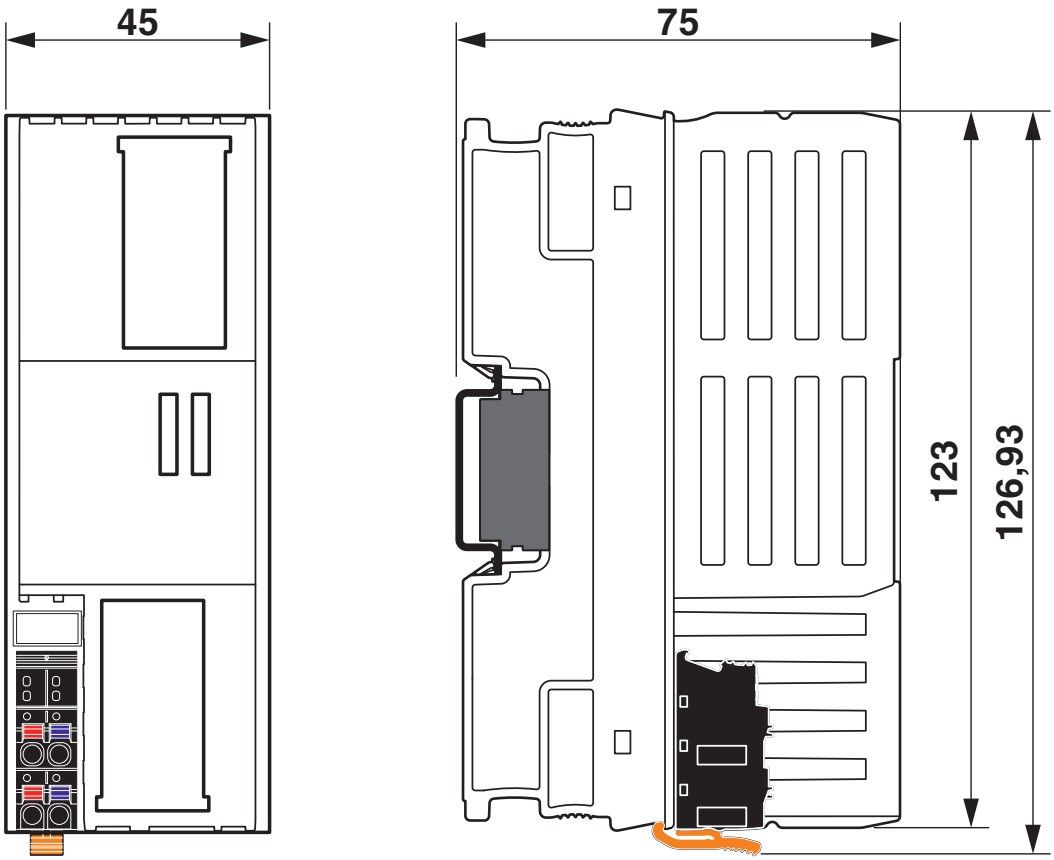

Connection diagram

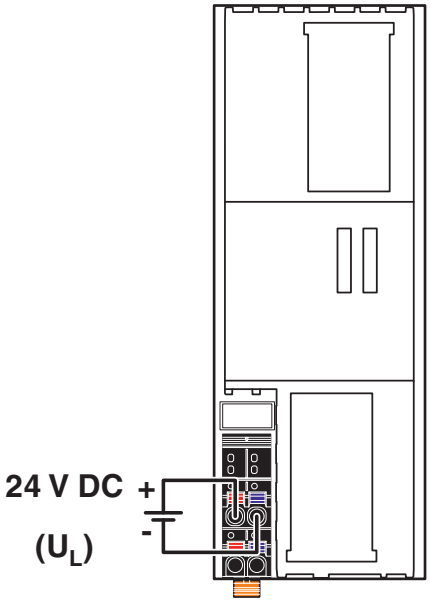

Block diagram

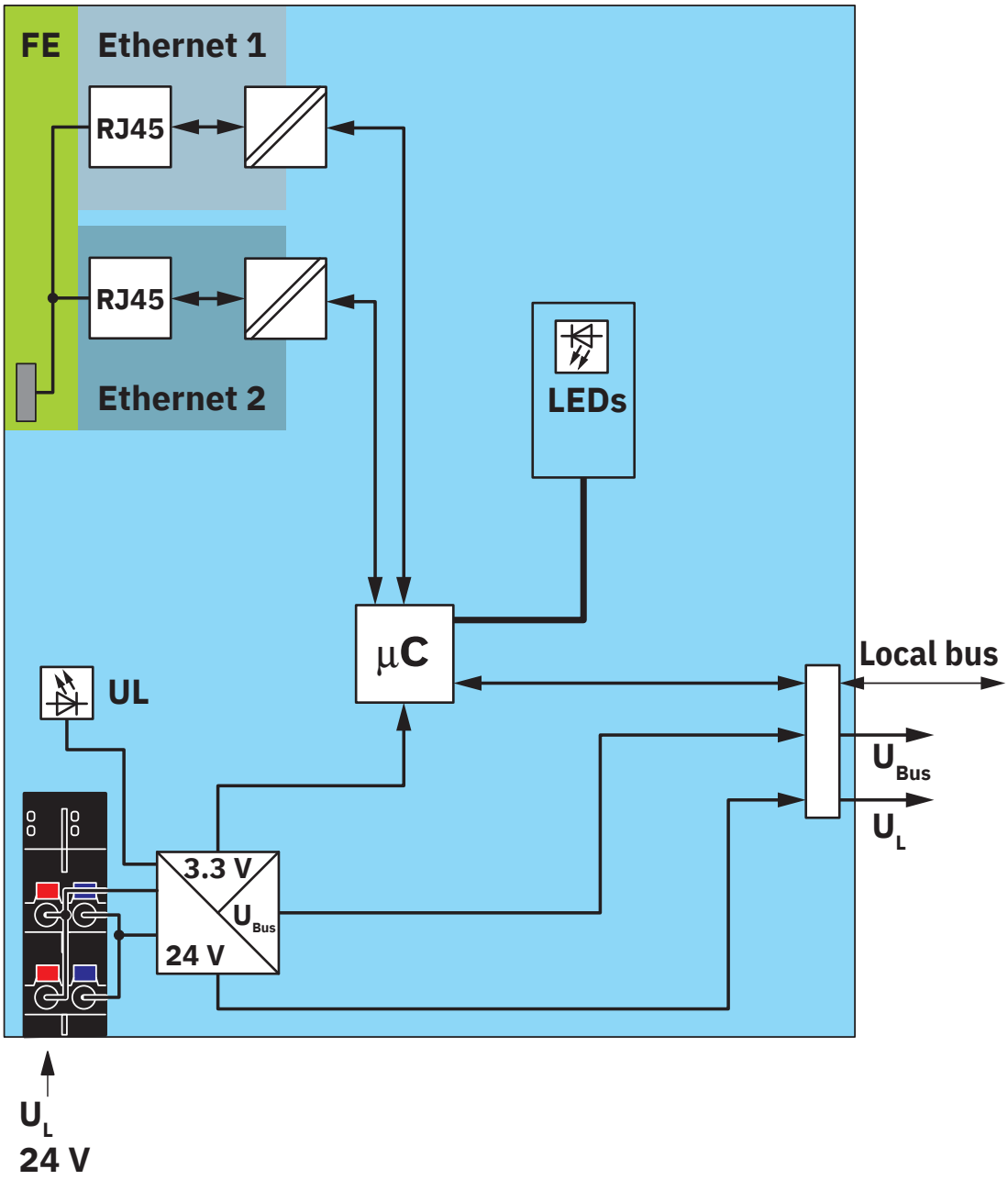

Internal wiring of the terminal points

Approvals

To download certificates, visit the product detail page: https://www.phoenixcontact.com/us/products/1213488

cULus Listed
Approval ID: E238705

IECEx
Approval ID: IECEx IBE 18.0023X

CCC
Approval ID: 2021122310114877

cUL Listed
Approval ID: E196811

UL Listed
Approval ID: E196811

ATEX
Approval ID: IBExU 18 ATEX B018 X

cULus Listed
Approval ID: E196811

Classifications

ECLASS

ECLASS-13.0	27242608
ECLASS-15.0	27242608

ETIM

ETIM 10.0	EC001604

UNSPSC

UNSPSC 21.0	32151600

Environmental product compliance

EU RoHS

Fulfills EU RoHS substance requirements	Yes
Exemption	7(a), 7(c)-I

China RoHS

Environment friendly use period (EFUP)	EFUP-25
	An article-related China RoHS declaration table can be found in the download area for the respective article under "Manufacturer declaration". For all articles with EFUP-E, no China RoHS declaration table issued and required.

EU REACH SVHC

REACH candidate substance (CAS No.)	Lead(CAS: 7439-92-1)
	6,6'-di-tert-butyl-2,2'-methylenedi-p-cresol(CAS: 119-47-1)

Phoenix Contact 2026 © - all rights reserved
https://www.phoenixcontact.com

Phoenix Contact USA
586 Fulling Mill Road
Middletown, PA 17057, United States
(+717) 944-1300
info@phoenixcon.com