NS 35/ 7,5 PERF 250MM - DIN rail perforated

1207639

https://www.phoenixcontact.com/us/products/1207639

Please be informed that the data shown in this PDF document is generated from our online catalog. Please find the complete data in the user documentation. Our general terms of use for downloads are valid.



DIN rail perforated, acc. to EN 60715, length: 250 mm, material: Steel, galvanized, passivated with a thick layer, mounting type: Standard profile, color: silver, Current dimensional tolerances: Profile tolerance due to burr/sharp edges = ±0.5 mm, Initial dimension = ±0.5 mm, Hole pattern = ±0.5 mm, Hole position = ±0.5 mm, Minimum rail length: Unperforated: > 20 mm, Perforated: > 100 mm, Last punching at Phoenix Contact: < 1750 mm

Commercial data

Item number	1207639
Packing unit	1 pc
Minimum order quantity	20 pc
Sales key	BH84
Product key	BH8422
GTIN	4046356366489
Weight per piece (including packing)	82 g
Weight per piece (excluding packing)	80 g
Customs tariff number	72166190
Country of origin	DE

Technical data

Product properties

Product type	DIN rail

Dimensions

Dimensional drawing	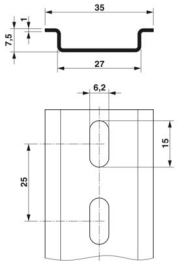
Width	35 mm
Hole width	15 mm
Hole height	6.2 mm
Depth	7.5 mm
Length	250 mm
Drill hole spacing	25 mm

Material specifications

Color	silver
Material	Steel
Coating	galvanized, passivated with a thick layer

Standards and regulations

Connection in acc. with standard	IEC / EN
Tests	acc. to EN 60715

Electrical tests

Short-time withstand current

Equivalent E-Cu cross-section	16 mm²
Short-time current resistance 1s	1.92 kA

Drawings

Dimensional drawing

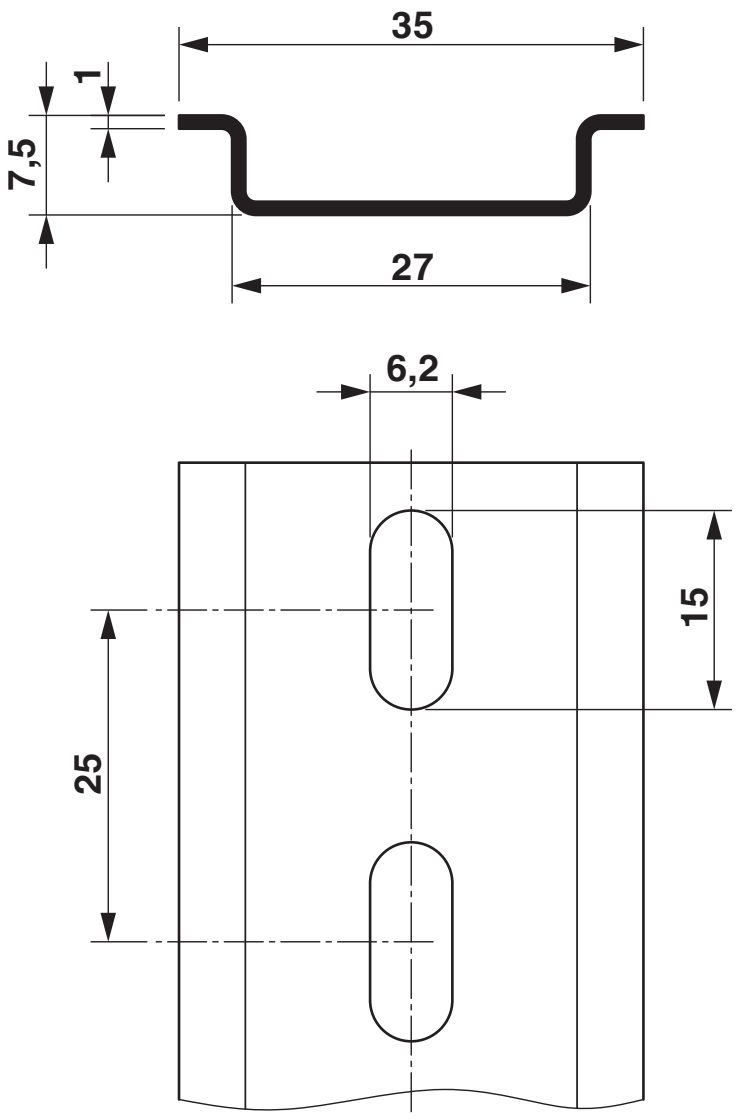

Classifications

ECLASS

ECLASS-13.0	27400602
ECLASS-15.0	27400602

ETIM

ETIM 10.0	EC001285

UNSPSC

UNSPSC 21.0	39121700

Environmental product compliance

EU RoHS

Fulfills EU RoHS substance requirements	Yes, No exemptions

China RoHS

Environment friendly use period (EFUP)	EFUP-E
	No hazardous substances above the limits

EU REACH SVHC

REACH candidate substance (CAS No.)	No substance above 0.1 wt%

EF3.1 Climate Change

CO2e kg	0.139 kg CO2e

Phoenix Contact 2026 © - all rights reserved
https://www.phoenixcontact.com

Phoenix Contact USA
586 Fulling Mill Road
Middletown, PA 17057, United States
(+717) 944-1300
info@phoenixcon.com