SACB-C-H180- 6/3-M8 HD - Connector hood

1197641

https://www.phoenixcontact.com/us/products/1197641

Please be informed that the data shown in this PDF document is generated from our online catalog. Please find the complete data in the user documentation. Our general terms of use for downloads are valid.



Connector hood, application: Standard, connection method: M8 socket Metal, number of slots: 6, number of positions: 3, slot assignment: single, status display: no, Universal; master cable connection: Pluggable screw connection 180°, shielding: no

Your advantages

- Flexible, distributed bundling of signals in one master cable

Commercial data

Item number	1197641
Packing unit	1 pc
Minimum order quantity	1 pc
Sales key	BF40
Product key	AF3BCG
GTIN	4063151258122
Weight per piece (including packing)	72.9 g
Weight per piece (excluding packing)	72 g
Customs tariff number	85444290
Country of origin	DE

Technical data

Notes

Note regarding documentation	For details about the PCB connectors used, refer to the technical data for MC 1,5/10-STF-3,5 (1847204)
Assembly note	NOTE: Observe the permissible bending radii when routing cables, since the degree of protection may be at risk if the bending forces are too high. Reduce mechanical loads upstream of the connector, e.g., by using cable ties.

Product properties

Product type	Connector hood
Application	Standard
Number of positions	3
Number of slots	6

Electrical properties

Max. operating voltage U_{max}	30 V DC
Nominal voltage U_N	24 V DC
Rated current, total	8 A
Max. current carrying capacity per path	2 A
Current carrying capacity per slot	2 A

Connection data

Conductor connection

Sensor/actuator connection system	M8 socket
Connection method	Pluggable screw connection
Conductor cross-section Flexible signal line	0.14 mm² ... 1.5 mm²
Conductor cross-section Flexible power supply	0.14 mm² ... 1.5 mm²
Connection cross section AWG Flexible signal line	26 ... 16
Connection cross section AWG Flexible power supply	26 ... 16
Stripping length Signal line	7 mm
Stripping length of the sheath	70 mm (Master cable)
Tightening torque, cover screw	1 Nm

Connection assignment

Slot/position = Wire color or connection	1 / 4 (A) = 1 / 4
	2 / 4 (A) = 2 / 4
	3 / 4 (A) = 3 / 4
	4 / 4 (A) = 4 / 4
	5 / 4 (A) = 5 / 4
	6 / 4 (A) = 6 / 4
	1-6 / 1 (+ 24 V) = U_N
	1-6 / 3 (0 V) = 0 V

Signaling

Status display present	no

Dimensions

Dimensional drawing	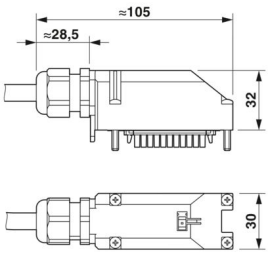
Wrench size, union nut	24 mm
Wrench size, counter nut	24 mm

Material specifications

Material Housing	PBT
Material Cable gland	PA 6 (Cable gland)
Seal material	CR/NBR (Cable gland)
Material of contact, master cable side	CU alloy
Material of the contact carrier on the master cable side	PA
Material of contact surface, master cable side	tin-plated

Cable/line

External cable diameter	6 mm ... 12 mm
Connection method	Pluggable screw connection

Environmental and real-life conditions

Ambient conditions

Degree of protection	IP67
Ambient temperature (operation)	-25 °C ... 80 °C

Drawings

Dimensional drawing

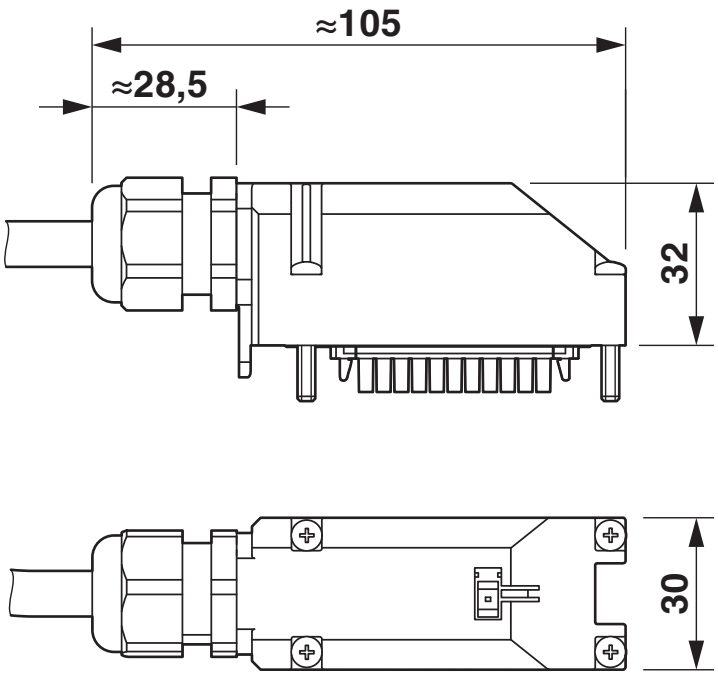

Schematic diagram

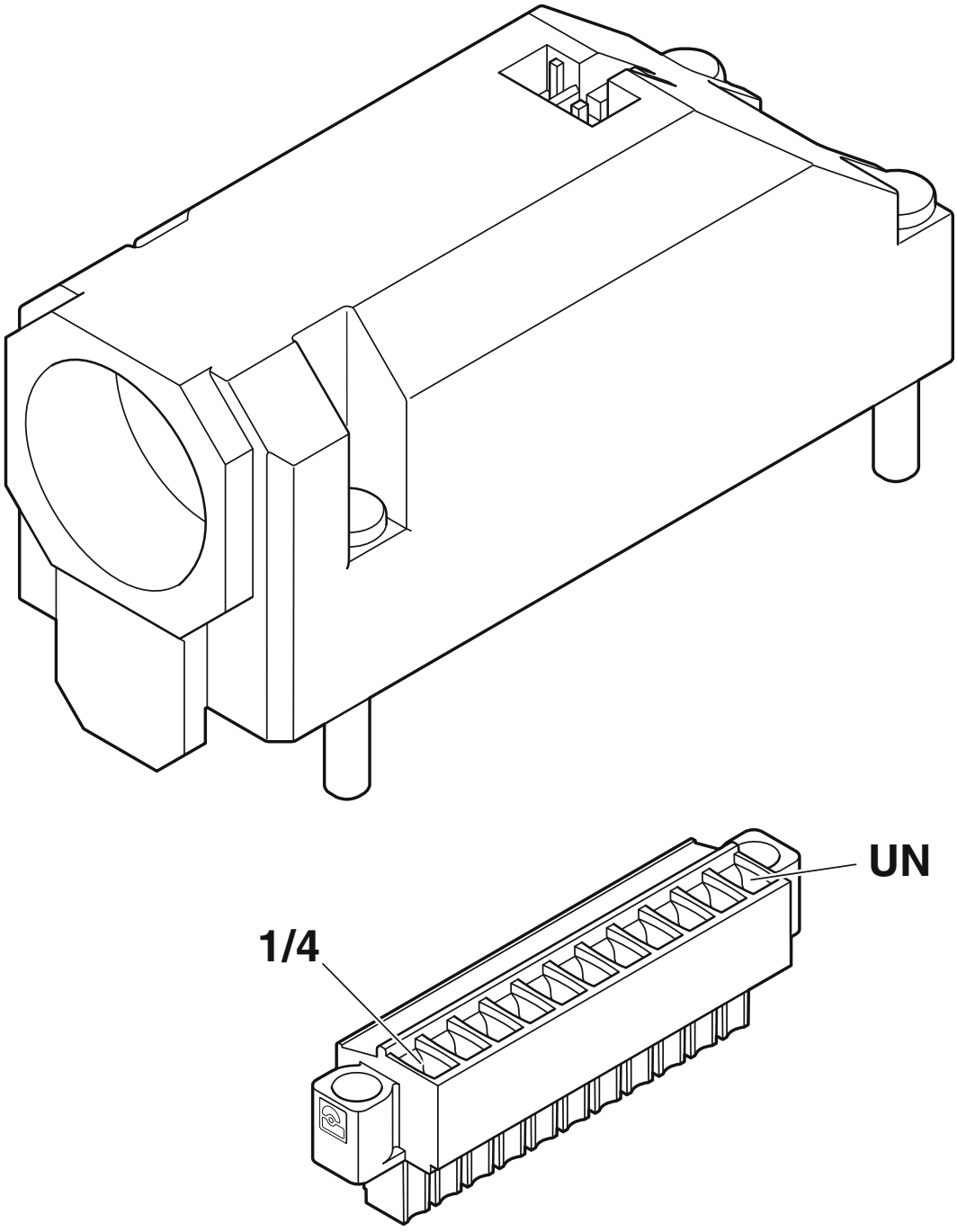

PCB connector positioning - the UN connection is on the end of the connector hood opposite the cable gland

Approvals

To download certificates, visit the product detail page: https://www.phoenixcontact.com/us/products/1197641

UL Recognized
Approval ID: FILE E 118976

	Nominal voltage U_N	Nominal current I_N	Cross section AWG	Cross section mm^2
keine				
	24 V	-	-	-

cUL Recognized
Approval ID: FILE E 118976

	Nominal voltage U_N	Nominal current I_N	Cross section AWG	Cross section mm^2
keine				
	24 V	-	-	-

Classifications

ECLASS

ECLASS-13.0	27440111
ECLASS-15.0	27440111

ETIM

ETIM 10.0	EC003558

UNSPSC

UNSPSC 21.0	31251500

Environmental product compliance

EU RoHS

Fulfills EU RoHS substance requirements	Yes, No exemptions

China RoHS

Environment friendly use period (EFUP)	EFUP-E
	No hazardous substances above the limits

EU REACH SVHC

REACH candidate substance (CAS No.)	No substance above 0.1 wt%

Phoenix Contact 2026 © - all rights reserved
https://www.phoenixcontact.com

Phoenix Contact USA
586 Fulling Mill Road
Middletown, PA 17057, United States
(+717) 944-1300
info@phoenixcon.com