SACB-C-H180-10/3-15,0PUR-M8 HD - Connector hood

1197636

https://www.phoenixcontact.com/us/products/1197636

Please be informed that the data shown in this PDF document is generated from our online catalog. Please find the complete data in the user documentation. Our general terms of use for downloads are valid.



Connector hood, application: Sensor/actuator box, connection method: M8 socket Metal, number of slots: 10, number of positions: 3, slot assignment: single, status display: no, Universal; master cable connection: Pluggable screw connection 180°, PUR/PVC, cable length: 15 m, shielding: no

Your advantages

- Flexible, distributed bundling of signals in one master cable

Commercial data

Item number	1197636
Packing unit	1 pc
Minimum order quantity	1 pc
Sales key	BF40
Product key	AF3BCG
GTIN	4063151258504
Weight per piece (including packing)	1,800 g
Weight per piece (excluding packing)	1,724.5 g
Customs tariff number	85444290
Country of origin	DE

Technical data

Notes

Assembly note	NOTE: Observe the permissible bending radii when routing cables, since the degree of protection may be at risk if the bending forces are too high. Reduce mechanical loads upstream of the connector, e.g., by using cable ties.

Product properties

Product type	Connector hood
Application	Sensor/actuator box
Number of positions	3
Number of slots	10

Electrical properties

Max. operating voltage U_{max}	30 V DC
Nominal voltage U_N	24 V DC
Rated current, total	8 A
Max. current carrying capacity per path	2 A
Current carrying capacity per slot	2 A

Connection data

Conductor connection

Sensor/actuator connection system	M8 socket
Connection method	Pluggable screw connection
Tightening torque, cover screw	1 Nm

Connection assignment

Slot/position = Wire color or connection	1 / 4 (A) = 1 / 4 = WH
	2 / 4 (A) = 2 / 4 = GN
	3 / 4 (A) = 3 / 4 = YE
	4 / 4 (A) = 4 / 4 = GY
	5 / 4 (A) = 5 / 4 = PK
	6 / 4 (A) = 6 / 4 = RD
	7 / 4 (A) = 7 / 4 = BK
	8 / 4 (A) = 8 / 4 = VT
	9 / 4 (A) = 9 / 4 = WHPK
	10 / 4 (A) = 10 / 4 = PKBN
	1-10 / 1 (+24 V) = U_N = BN
	1-10 / 3 (0 V) = 0 V = BU

Signaling

Status display present	no

SACB-C-H180-10/3-15,0PUR-M8 HD - Connector hood

1197636

https://www.phoenixcontact.com/us/products/1197636

Dimensions

Dimensional drawing	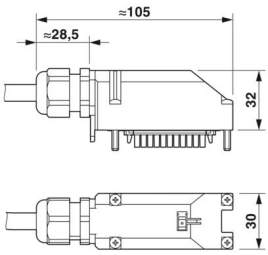
Width	30 mm
Height	32 mm
Length	105 mm

Material specifications

Material Housing	PBT
Material Cable gland	PA 6 (Cable gland)
Seal material	CR/NBR (Cable gland)
Material of contact, master cable side	CU alloy
Material of the contact carrier on the master cable side	PA
Material of contact surface, master cable side	tin-plated

Cable/line

Cable length	15 m

PUR/PVC black [PUR]

Dimensional drawing	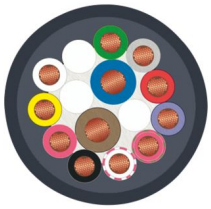
Cable weight	111.1 kg/km
UL AWM Style	20549
Number of positions	12
Shielded	no
Cable type	PUR/PVC black [PUR]
Conductor structure signal line	19x 0.15 mm
AWG signal line	22
Conductor structure, voltage supply	42x 0.15 mm
AWG power supply	18
Conductor cross-section	10x 0.34 mm² (Signal line)
	2x 0.75 mm² (power line)

Wire diameter incl. insulation	1.3 mm ±0.1 mm (Signal line)
	1.8 mm ±0.1 mm (power line)
External cable diameter	8.60 mm ±0.2 mm
Outer sheath, material	PUR
External sheath, color	black RAL 9005
Conductor material	Bare Cu litz wires
Material wire insulation	PVC
Single wire, color	brown, blue, white, green, yellow, gray, pink, red, black, violet, white/pink, pink/brown
Inner sheath thickness	≥ 0.15 mm
Thickness, outer sheath	≥ 0.38 mm
Overall twist	Wires twisted in layers
Nominal voltage, cable	300 V
Test voltage	2000 V
Minimum bending radius, fixed installation	7.5 x D
Minimum bending radius, flexible installation	10 x D
Smallest bending radius, fixed installation	65 mm
Smallest bending radius, movable installation	86 mm
Dynamic load capacity (bending)	Max. bending cycles: 1500000, Bending radius: 86 mm, Traversing path: 2 m, Traversing rate: 2 m/s
Flame resistance	DIN EN 50265
Resistance to oil	according to VDE 0472 Part 803
Other resistance	Highly resistant to acids, alkaline solutions and solvents
Special properties	Silicone-free
Ambient temperature (operation)	-40 °C ... 90 °C (cable, fixed installation)
	-5 °C ... 80 °C (Cable, flexible installation)
	80 °C (in acc. with UL)

Environmental and real-life conditions

Ambient conditions

Degree of protection	IP67
Ambient temperature (operation)	-25 °C ... 80 °C

Drawings

Dimensional drawing

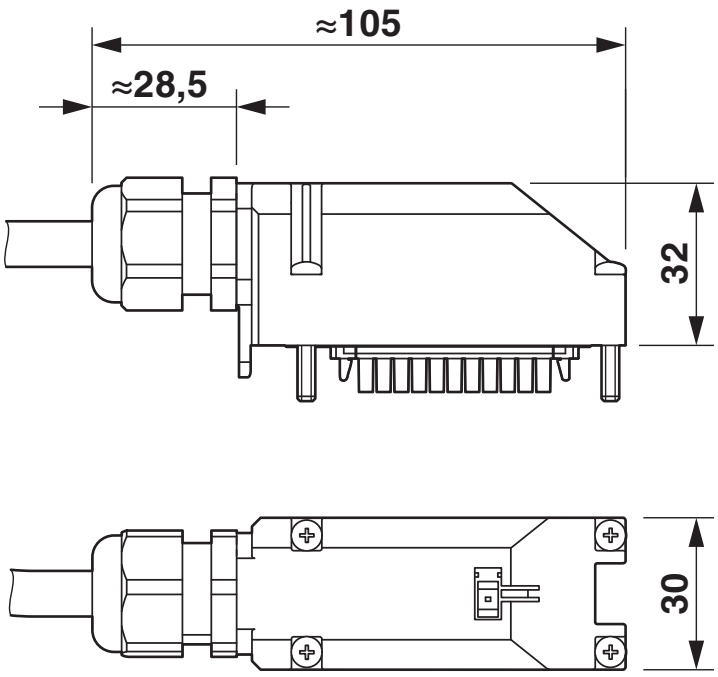

Approvals

To download certificates, visit the product detail page: https://www.phoenixcontact.com/us/products/1197636

UL Recognized
Approval ID: FILE E 118976

	Nominal voltage U_N	Nominal current I_N	Cross section AWG	Cross section mm^2
keine				
	24 V	-	-	-

cUL Recognized
Approval ID: FILE E 118976

	Nominal voltage U_N	Nominal current I_N	Cross section AWG	Cross section mm^2
keine				
	24 V	-	-	-

Classifications

ECLASS

ECLASS-13.0	27440108
ECLASS-15.0	27440108

ETIM

ETIM 10.0	EC002585

UNSPSC

UNSPSC 21.0	31251500

Environmental product compliance

EU RoHS

Fulfills EU RoHS substance requirements	Yes, No exemptions

China RoHS

Environment friendly use period (EFUP)	EFUP-E
	No hazardous substances above the limits

EU REACH SVHC

REACH candidate substance (CAS No.)	No substance above 0.1 wt%

Phoenix Contact 2026 © - all rights reserved
https://www.phoenixcontact.com

Phoenix Contact USA
586 Fulling Mill Road
Middletown, PA 17057, United States
(+717) 944-1300
info@phoenixcon.com