SACB- 4/3-L-C-M8 HD - Distributor box

1197589

https://www.phoenixcontact.com/us/products/1197589

Please be informed that the data shown in this PDF document is generated from our online catalog. Please find the complete data in the user documentation. Our general terms of use for downloads are valid.



Distributor box, application: Standard, connection method: M8 socket Metal, number of slots: 4, number of positions: 3, coding: A, slot assignment: single, status display: yes, PNP; master cable connection: Pluggable screw connection 180°, shielding: no

Your advantages

- Safety in the field, thanks to molded housing and high degree of protection
- Convenient: increased machine availability thanks to quick and easy diagnostics
- Flexible: distributor box with connector hood for on-site assembly

Commercial data

Item number	1197589
Packing unit	1 pc
Minimum order quantity	1 pc
Sales key	BF40
Product key	AF3BCD
GTIN	4063151257934
Weight per piece (including packing)	192.1 g
Weight per piece (excluding packing)	192.1 g
Customs tariff number	85444290
Country of origin	DE

Technical data

Notes

Note regarding documentation	For details about the PCB connectors used, refer to the technical data for MC 1,5/10-STF-3,5 (1847204)
Assembly note	NOTE: Observe the permissible bending radii when routing cables, since the degree of protection may be at risk if the bending forces are too high. Reduce mechanical loads upstream of the connector, e.g., by using cable ties.
Note on application	Unused slots are to be sealed off prior to commissioning. Suitable sealing elements are to be found under "Accessories".

Product properties

Product type	Distributor box
Application	Standard
Number of positions	3
Number of slots	4
Coding	A
LED	yes

System properties

Local diagnostics

Monitored function	Supply voltage
Optical representation	Green LED

Electrical properties

Max. operating voltage U_{max}	30 V DC
Local diagnostics	Supply voltage Green LED
	Status display I/O Yellow LED
Nominal voltage U_N	24 V DC
Rated current, total	8 A
Max. current carrying capacity per path	2 A
Current carrying capacity per slot	2 A

Connection data

Conductor connection

Sensor/actuator connection system	M8 socket
Conductor cross-section Flexible signal line	0.14 mm² ... 1.5 mm²
Conductor cross-section Flexible power supply	0.14 mm² ... 1.5 mm²
Connection cross section AWG Flexible signal line	26 ... 16
Connection cross section AWG Flexible power supply	26 ... 16
Stripping length Signal line	7 mm
Stripping length of the sheath	70 mm (Master cable)
Tightening torque, cover screw	1 Nm

Tightening torque of mounting screw for fixing the housing	0.8 Nm

Connection assignment

Slot/position = Wire color or connection	1 / 4 (A) = 1 / 4
	2 / 4 (A) = 2 / 4
	3 / 4 (A) = 3 / 4
	4 / 4 (A) = 4 / 4
	1-4 / 1 (+ 24 V) = U_N
	1-4 / 3 (0 V) = 0 V

Signaling

Status display present	yes

Dimensions

Dimensional drawing	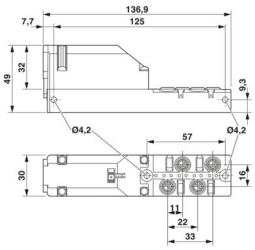
Width	30 mm
Height	49 mm
Length	137 mm
Wrench size, union nut	24 mm
Wrench size, counter nut	24 mm

Material specifications

Material Threaded sleeve	Cu alloy
Material Housing	PBT
Material Molding compound	PUR
Seal material	FKM (Cable gland)
	FKM (Hood seal)
Contact material	CuZn
Contact surface material	Ni/Au
Contact carrier material	PBT
Material of contact, master cable side	CU alloy
Material of the contact carrier on the master cable side	PA
Material of contact surface, master cable side	tin-plated

Cable/line

External cable diameter	6 mm ... 12 mm
Connection method	Pluggable screw connection

Environmental and real-life conditions

Ambient conditions

Degree of protection	IP67
Ambient temperature (operation)	-25 °C ... 80 °C

Standards and regulations

Standard designation	M8 connector
Standards/specifications	IEC 61076-2-104

Drawings

Dimensional drawing

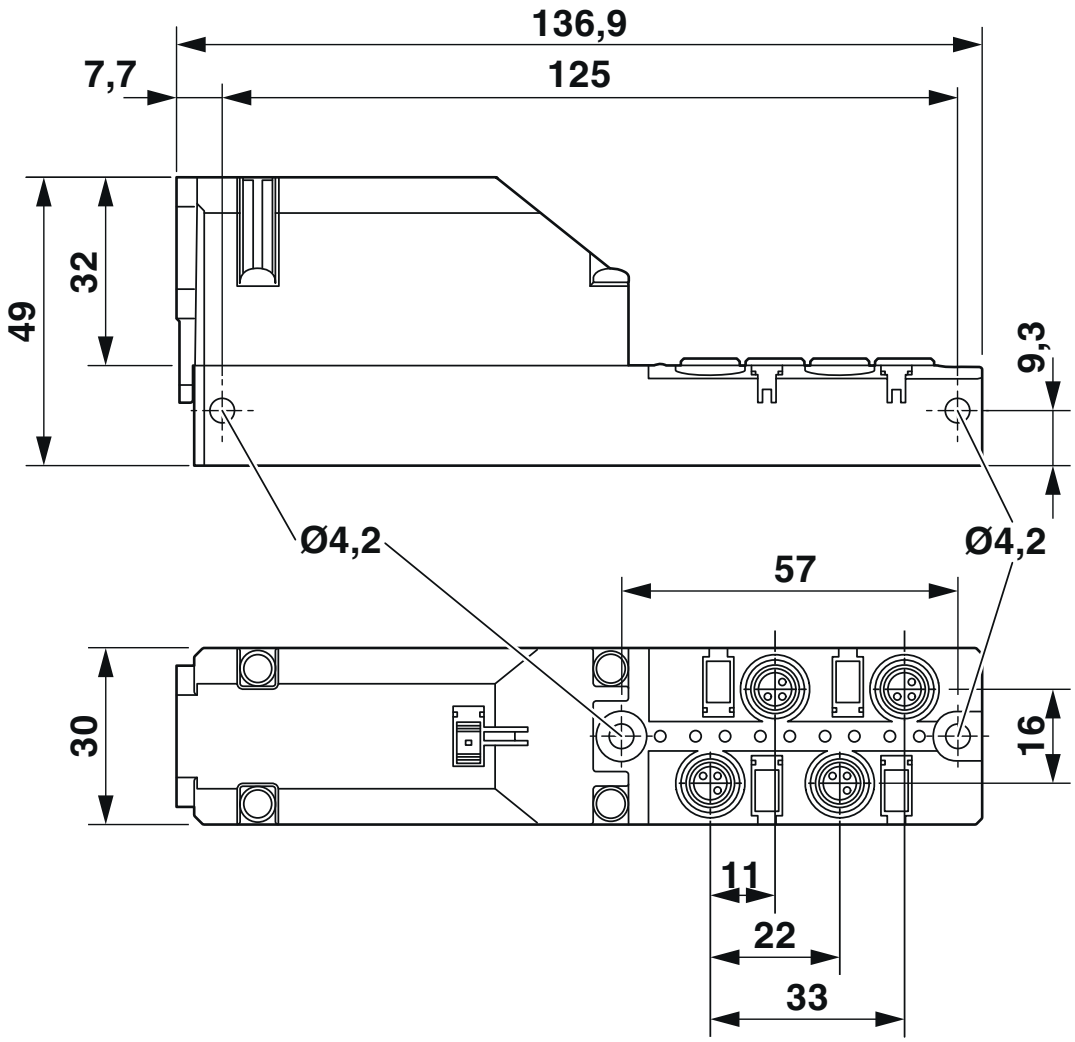

Schematic diagram

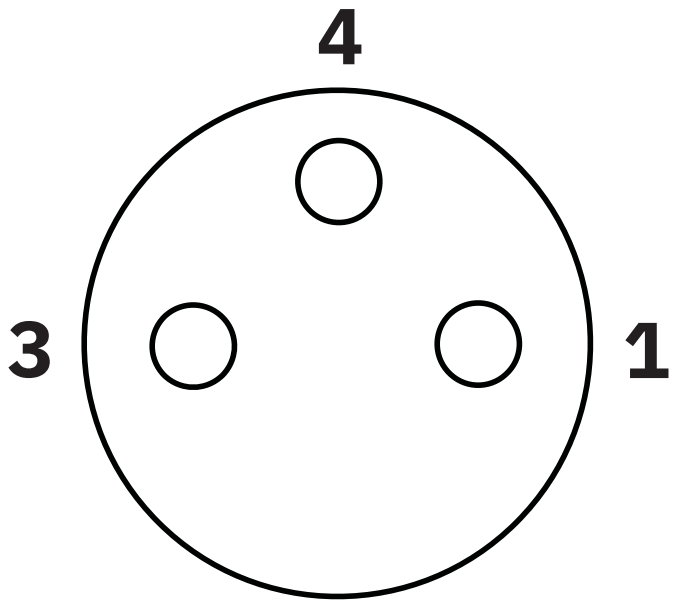

M8 slot, socket, 3-pos.

Schematic diagram

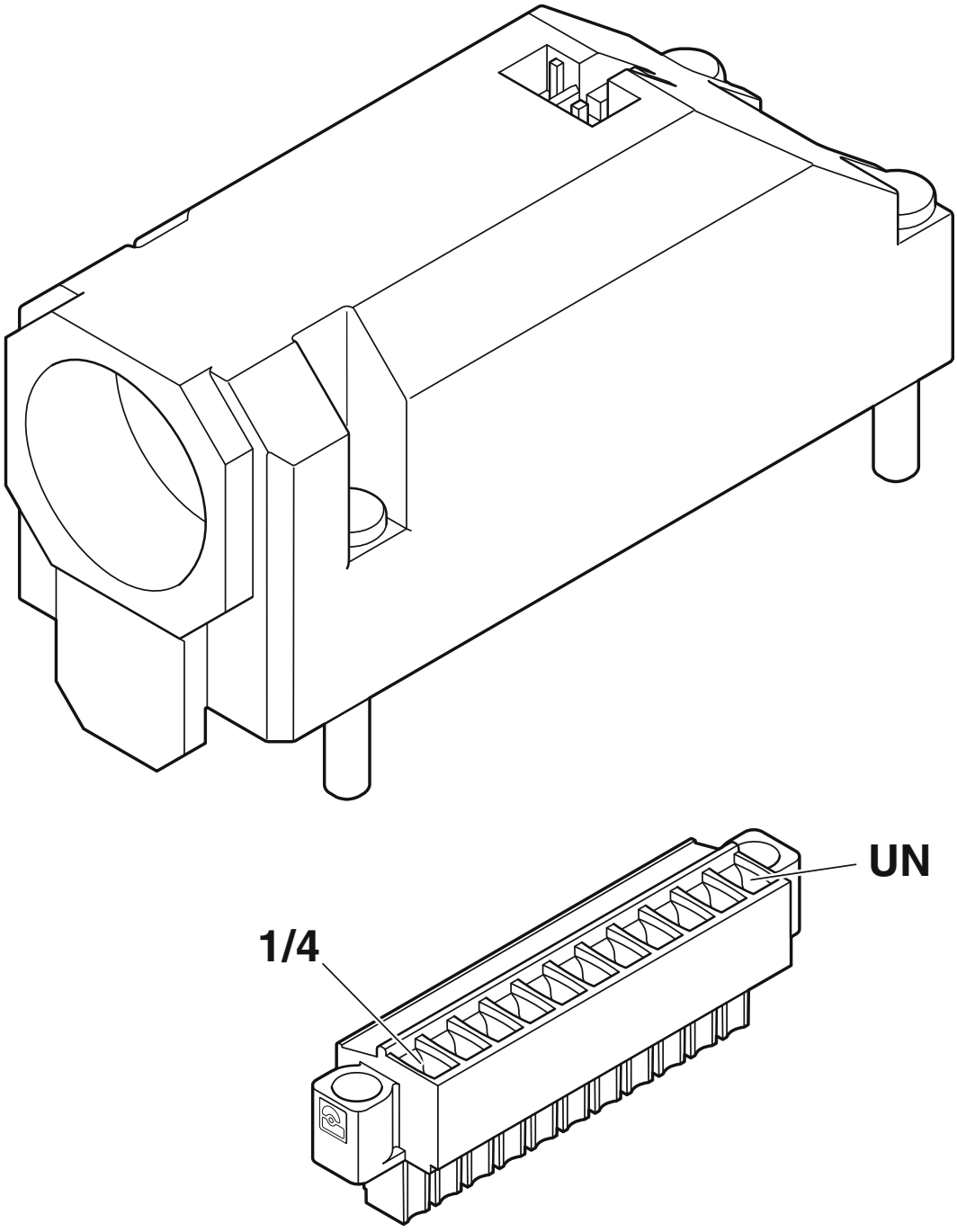

PCB connector positioning - the UN connection is on the end of the connector hood opposite the cable gland

Circuit diagram

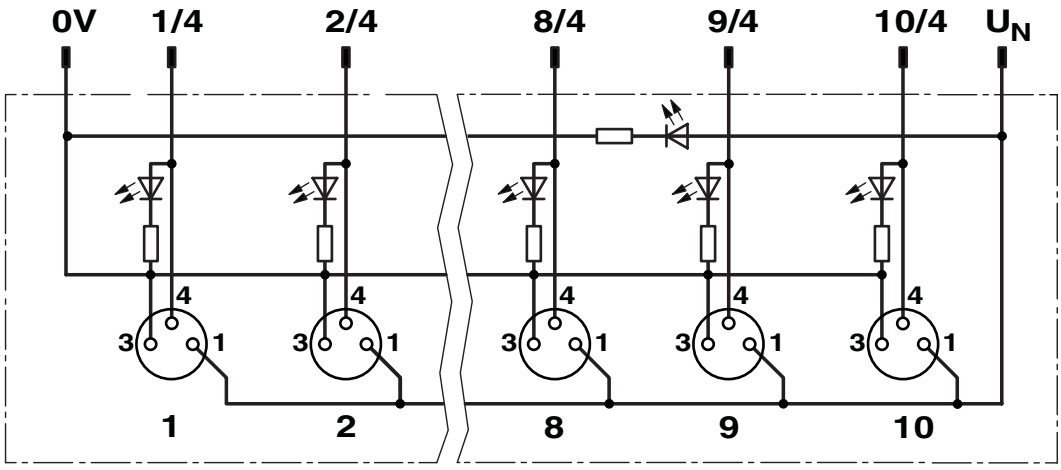

Classifications

ECLASS

ECLASS-13.0	27440111
ECLASS-15.0	27440111

ETIM

ETIM 10.0	EC003558

UNSPSC

UNSPSC 21.0	31251500

Environmental product compliance

EU RoHS

Fulfills EU RoHS substance requirements	Yes, No exemptions

China RoHS

Environment friendly use period (EFUP)	EFUP-E
	No hazardous substances above the limits

EU REACH SVHC

REACH candidate substance (CAS No.)	No substance above 0.1 wt%

Phoenix Contact 2026 © - all rights reserved
https://www.phoenixcontact.com

Phoenix Contact USA
586 Fulling Mill Road
Middletown, PA 17057, United States
(+717) 944-1300
info@phoenixcon.com