EV-T2M3SO12-4P-B - Infrastructure charging socket

1164300

https://www.phoenixcontact.com/us/products/1164300

Please be informed that the data shown in this PDF document is generated from our online catalog. Please find the complete data in the user documentation. Our general terms of use for downloads are valid.



CHARX connect modular, Type 2, Infrastructure charging socket, 32 A , 480 V AC, Basic, Single-core wires for AC and communication are available separately, see accessories, length: 0 m, locking actuator: 12 V, 4-pos., square, Rear panel mounting, M5 thread, housing: black, without single-core wires, for charging electric vehicles (EV) with alternating current (AC), PHOENIX CONTACT logo, IEC 62196-2

Product description

Infrastructure charging socket for charging electric vehicles (EV) with alternating current (AC), compatible with type 2 Infrastructure Plugs, for installation at charging stations for E-Mobility (EVSE)

Your advantages

- Protected against overheating with precise temperature measurement
- Flexible mounting and easy maintenance with plug-in cables
- Available with your logo on request - for consistent branding of your charging station
- Waterproof and dirtproof due to fully molded contacts
- Developed and produced in accordance with the IATF 16949 automotive standard and ISO 9001
- Uniform, space-saving installation space

Commercial data

Item number	1164300
Packing unit	1 pc
Minimum order quantity	1 pc
Sales key	EM01
Product key	XWBFLA
GTIN	4063151177829
Weight per piece (including packing)	416 g
Weight per piece (excluding packing)	414 g
Customs tariff number	85366990
Country of origin	PL

Set consists of

EV-T2M3SO-CAP - Protective cap

1202424

https://www.phoenixcontact.com/us/products/1202424



CHARX connect modular, Type 2, Protective cap, Gen 2, Accessories, circular, for strain relief and touch protection, IEC 62196-2

Technical data

Product properties

Product type	Infrastructure charging socket
Product family	CHARX connect modular
Type	Gen 2 Basic
Design	without single-core wires
Compatibility	compatible with the CHARX connect modular Gen 2 product portfolio
	compatible with the CHARX connect protective cover product portfolio
	not compatible with CHARX connect modular Gen 3 cable sets
Charging standard	Type 2
Charging mode	Mode 3, Case B
Design (Infrastructure charging socket)	square
	circular
Affixed logo	PHOENIX CONTACT logo
Customer variations	On request

Electrical properties

Charging power and current (AC charging, 3-phase)

Type of charging current	AC 3-phase
Charging current	32 A AC (3-phase)
Charging power	26.6 kW (3-phase)
Charging power rating	22 kW (32 A, 3-phase)
Operating voltage	typ. 400 V AC

Pin assignment (Power contacts)

Note on the connection method	Connection via spade connector, separable and reconnectable
Number	5 (L1, L2, L3, N, PE)
Rated voltage	480 V AC
Rated current	32 A (The infrastructure charging socket is designed for both 1-phase and 3-phase charging with charging currents of up to 32 A.)

Pin assignment (Signal contacts)

Note on the connection method	Connection via spade connector, separable and reconnectable
Type of signal transmission	Pulse width modulation
Number	2 (CP, PP)
Rated voltage	30 V AC
Rated current	2 A

Locking actuator

Locking actuator	12 V, 4-pos.
	Top center position

Possible power supply range at the motor	9 V ... 16 V
Maximum voltage for locking detection	30 V
Typical motor current for locking	0.2 A
Reverse current of the motor	max. 1 A
Max. dwell time with reverse current	1000 ms
Recommended adaptation time	600 ms
Pause time after entry or exit path	3 s
Service life insertion cycles	> 10000 load cycles
Lock recognition	available
Mechanical emergency release	available
Ambient temperature (operation)	-30 °C ... 50 °C
Cable length	0.5 m
Cable structure	4 x 0.5 mm²

Dimensions

Infrastructure charging socket

Dimensional drawing	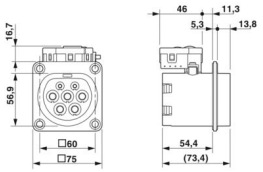
Width	75 mm
Height	91.71 mm
Depth	87.95 mm

Bore dimensions

Dimensional drawing	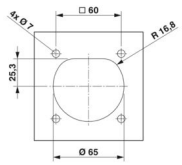
Width	60 mm
Height	60 mm

Protective cap

Width	64 mm
Height	57 mm
Depth	24 mm

Material specifications

Color (Housing)	black (9005)
Material (Housing)	Plastic
Material (Contact surface)	Silver

Cable/line

Cable length	0 m
Cable type	Single-core wires for AC and communication are available separately, see accessories

Single-core wires for locking actuator

Cable length	0.5 m
Cable structure	4 x 0.5 mm²
Single wire, material	PVC
Single wire, color	BU/RD, BU/GN, BU/YE, BU/BN
External cable diameter	1.60 mm ±0.20 mm
Cable resistance	≤ 37.1 Ω/m

Mechanical properties

Mechanical data

Insertion/withdrawal cycles	> 10000
Insertion force	< 100 N
Withdrawal force	< 100 N

Environmental and real-life conditions

Ambient conditions

Degree of protection (Infrastructure charging socket)	IP44 (plugged in)
Degree of protection (Protective cover)	IP54 (see accessories)
Ambient temperature (operation)	-30 °C ... 50 °C
Ambient temperature (storage/transport)	-40 °C ... 80 °C
Altitude	5000 m (above sea level)

Standards and regulations

Standards/specifications	IEC 62196-2
Note	Compliant with AFIR - EU 2025/656

Mounting

Mounting type Infrastructure charging socket	Rear panel mounting (0 to 90 degree frontal inclination possible)
Mounting type Protective cover	Rear panel mounting (available separately)
Mounting hole diameter	7.00 mm (ø)
Fixing screws	M5 thread
Screws included in the scope of delivery	none

Drawings

Dimensional drawing

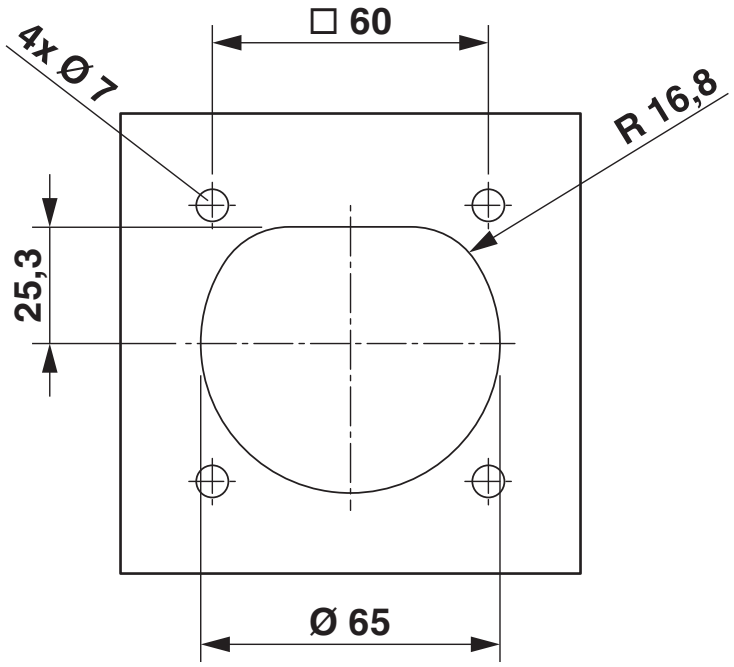

Dimensional drawing

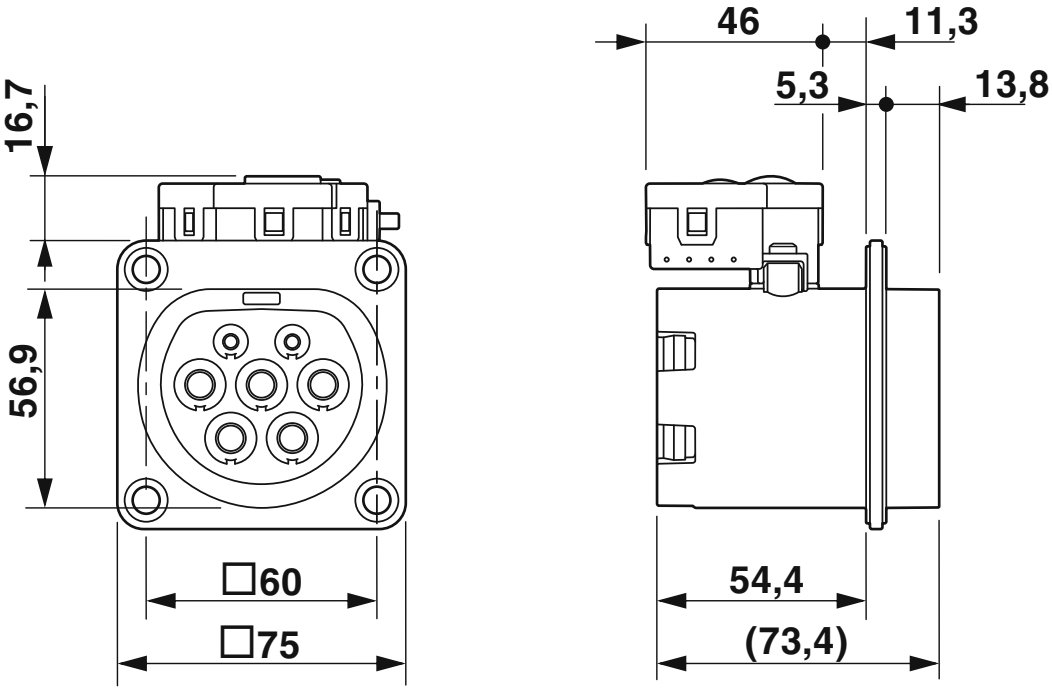

Connection diagram

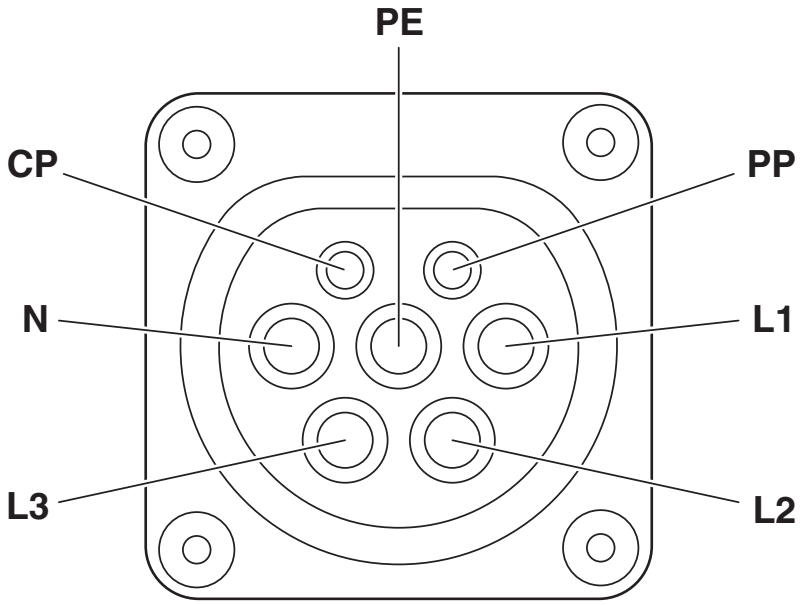

Pin assignment of infrastructure charging socket

Schematic diagram

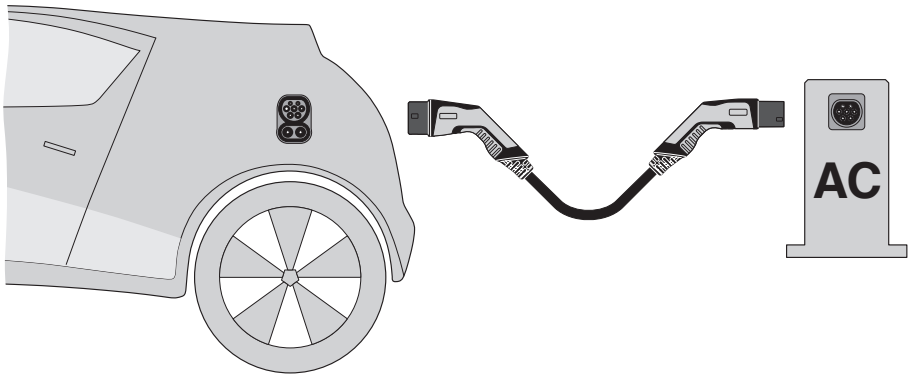

Operating instructions

Schematic diagram

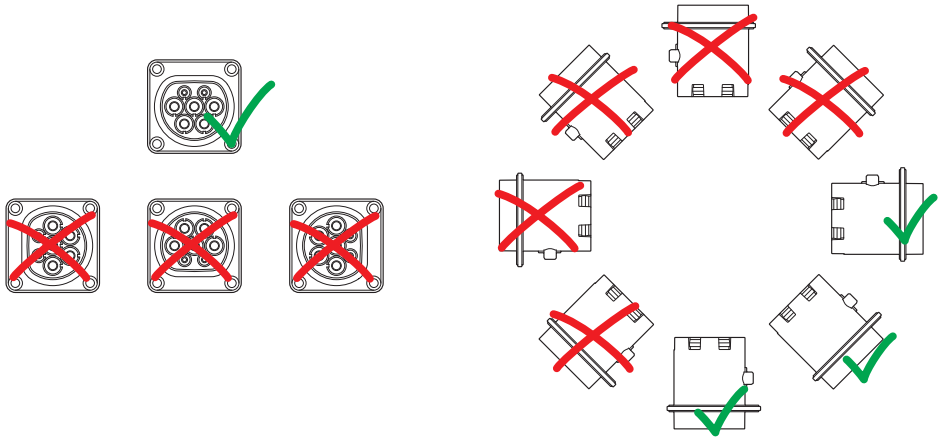

Installation positions

Schematic diagram

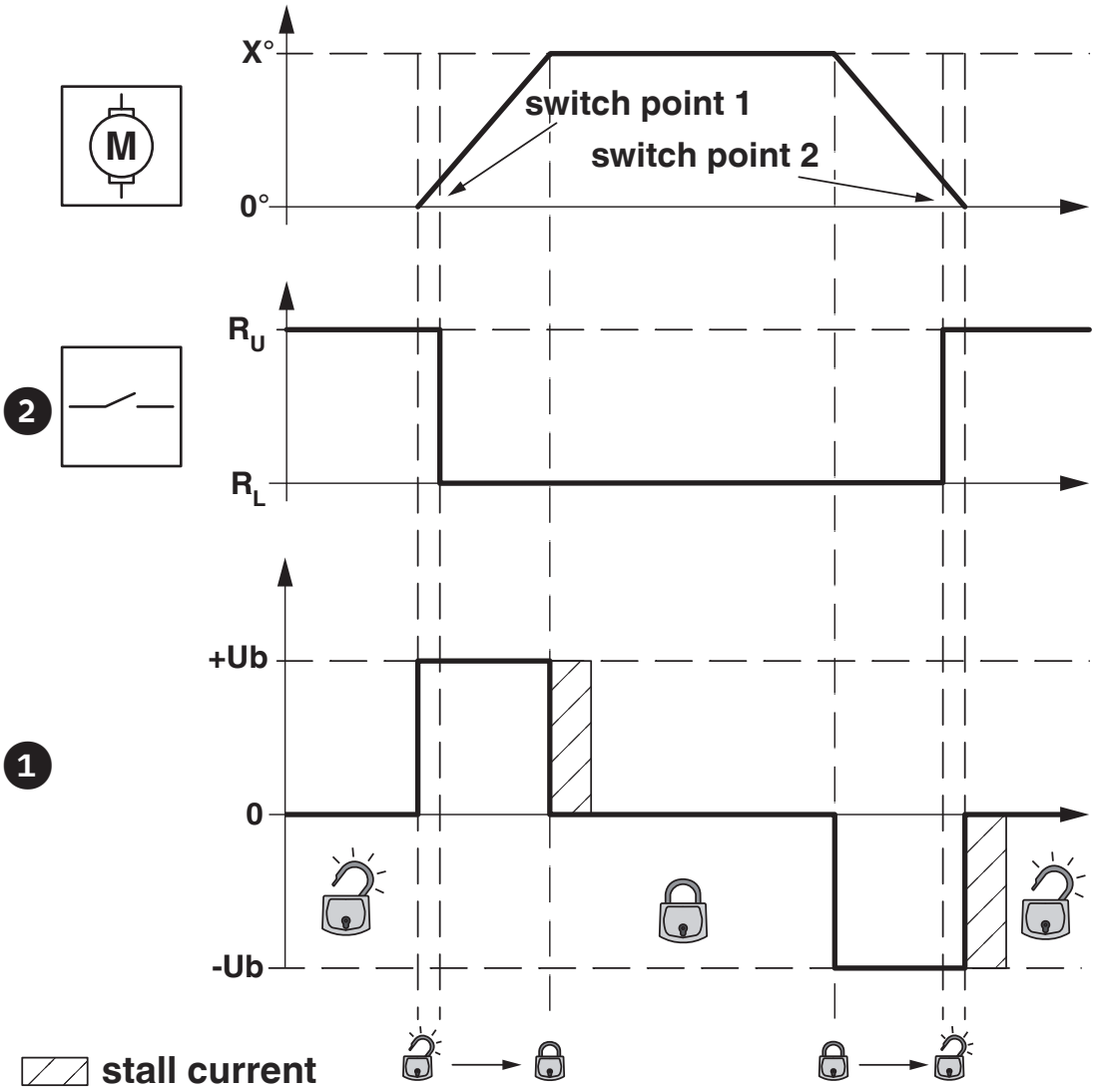

Locking states of the locking actuator

Schematic diagram

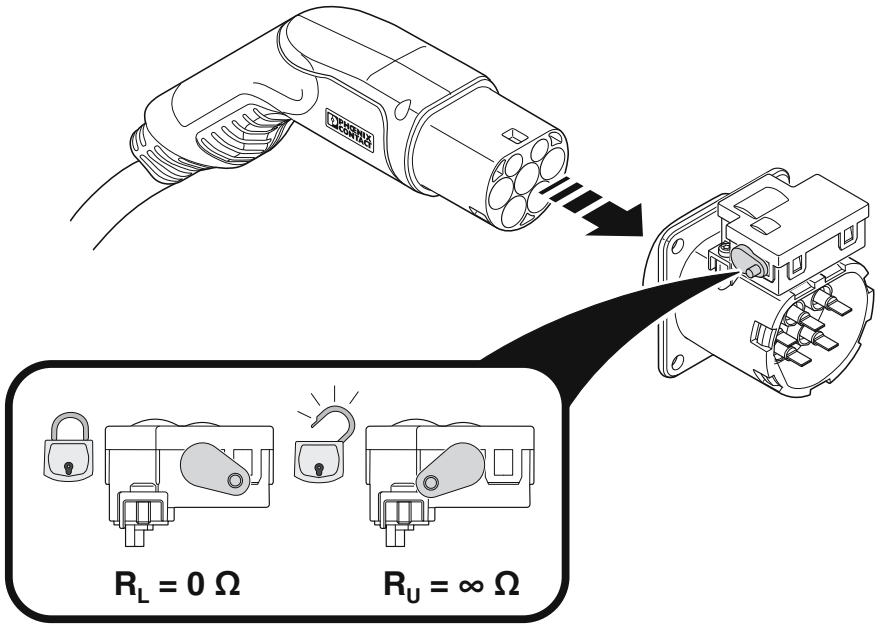

Position of the emergency unlocking lever on the locking actuator

Block diagram

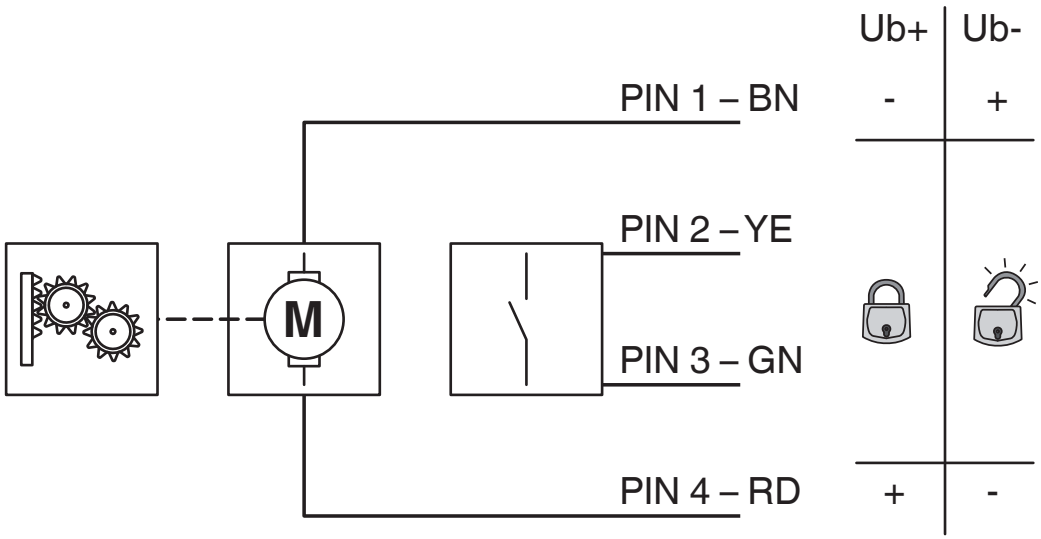

Block diagram of the locking actuator

Classifications

ECLASS

ECLASS-13.0	27144706
ECLASS-15.0	27144706

ETIM

ETIM 10.0	EC002898

UNSPSC

UNSPSC 21.0	39121800

Environmental product compliance

EU RoHS

Fulfills EU RoHS substance requirements	Yes
Exemption	6(c)

China RoHS

Environment friendly use period (EFUP)	EFUP-10
	An article-related China RoHS declaration table can be found in the download area for the respective article under "Manufacturer declaration". For all articles with EFUP-E, no China RoHS declaration table issued and required.

EU REACH SVHC

REACH candidate substance (CAS No.)	Lead(CAS: 7439-92-1)
SCIP	6cf5635b-48c9-47c2-b079-f72b214d75b7

EF3.1 Climate Change

CO2e kg	5.047 kg CO2e

Phoenix Contact 2026 © - all rights reserved
https://www.phoenixcontact.com

Phoenix Contact USA
586 Fulling Mill Road
Middletown, PA 17057, United States
(+717) 944-1300
info@phoenixcon.com