H4X:2CSFF:AC - Housing

1151959

https://www.phoenixcontact.com/us/products/1151959

Please be informed that the data shown in this PDF document is generated from our online catalog. Please find the complete data in the user documentation. Our general terms of use for downloads are valid.



HEAVYPORT B24 panel mounting base, with single locking latch, with plastic protective cover, with stainless steel front plate connections, 2x shielded RJ45 CAT5e (female/female), 1x 120 V AC outlet

Your advantages

- Good shielding in the event of electromagnetic interference

Commercial data

Item number	1151959
Packing unit	1 pc
Minimum order quantity	1 pc
Sales key	BF69
Product key	AF7EGX
GTIN	4063151148546
Weight per piece (including packing)	22.22 g
Weight per piece (excluding packing)	22.22 g
Country of origin	US

Technical data

Product properties

Product type	Stackable housing set
Housing type	Panel mounting base
Application	Standard
Type	B24
Protective cover	yes

Electrical properties

Rated voltage (III/3)	max. 125 V AC (AC outlet, UL, CSA rating)
	max. 150 V (RJ45)
Rated current	max. 1.5 A DC (RJ45)
	15 A (AC outlet, UL, CSA rating)

Connection data

Tightening torque	1.5 ... 2 Nm

Material specifications

Material	Stainless steele (Data front plate)
Seal material	NBR, conductive (profile gasket)
	NBR, conductive (Flat gasket)
Housing material	Die-cast aluminum, salt water resistant
Housing surface material	uncoated
Material, protective cover	PA
Locking latch material	Polyamide

Connector

Contact insert design	with 2x RJ45 Cat 5E shield Ethernet Socket/socket, snap-in slot locking
	with 1x 120 V AC outlet Terminal 6.35 mm (0.250 in.)

Environmental and real-life conditions

Ambient conditions

Degree of protection	IP66
	IP67
Impact strength	IK08
Ambient temperature (operation)	-40 °C ... 125 °C (Housing)

Drawings

Dimensional drawing

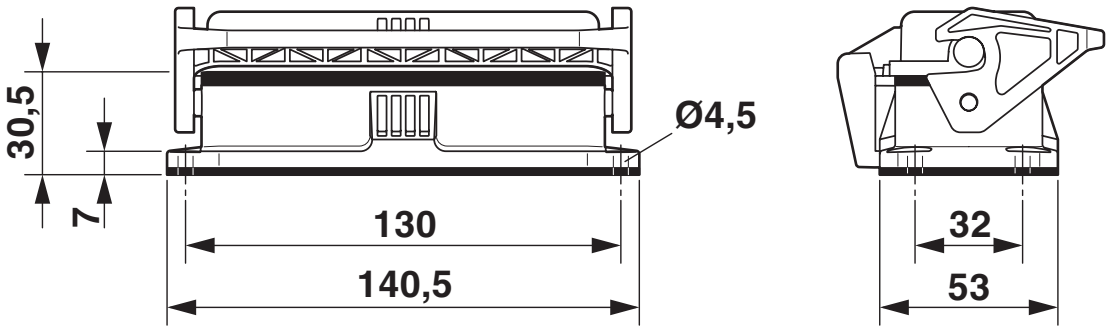

Dimensional drawing

Dimensional drawing

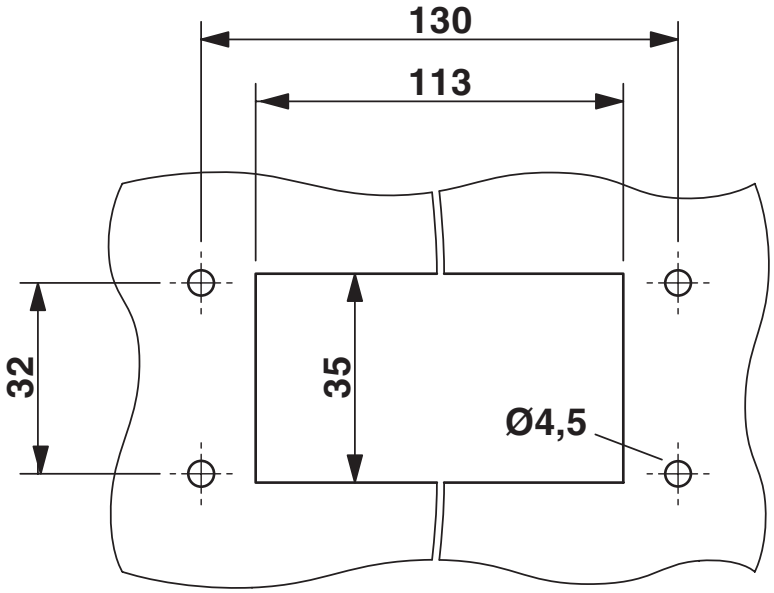

Mounting cutout

Classifications

ECLASS

ECLASS-13.0	27440113
ECLASS-15.0	27440113

ETIM

ETIM 10.0	EC002636

Environmental product compliance

China RoHS

Environment friendly use period (EFUP)	EFUP-50
	An article-related China RoHS declaration table can be found in the download area for the respective article under "Manufacturer declaration". For all articles with EFUP-E, no China RoHS declaration table issued and required.

EU REACH SVHC

REACH candidate substance (CAS No.)	No substance above 0.1 wt%

Phoenix Contact 2026 © - all rights reserved
https://www.phoenixcontact.com

Phoenix Contact USA
586 Fulling Mill Road
Middletown, PA 17057, United States
(+717) 944-1300
info@phoenixcon.com