NBC-M12MRY/2,0-94H - Hybrid cable

1146464

https://www.phoenixcontact.com/us/products/1146464

Please be informed that the data shown in this PDF document is generated from our online catalog. Please find the complete data in the user documentation. Our general terms of use for downloads are valid.



Hybrid cable, Ethernet hybrid CAT5 (100 Mbps), 8-position, PUR halogen-free, black RAL 9005, shielded (Advanced Shielding Technology), Plug angled M12, coding: Y / IP65/IP67, on free cable end, cable length: 2 m, Power with Ethernet (PWE)

Commercial data

Item number	1146464
Packing unit	1 pc
Minimum order quantity	1 pc
Sales key	BF04
Product key	AF1CML
GTIN	4063151137649
Weight per piece (including packing)	259.6 g
Weight per piece (excluding packing)	259.6 g
Customs tariff number	85444290
Country of origin	PL

Technical data

Product properties

Product type	Data cable preassembled
Application	Standard
Number of positions	8
No. of cable outlets	1
Shielded	yes
Coding	Y

Interfaces

Bus system	Ethernet
Signal type/category	Ethernet hybrid CAT5 (IEC 11801), 100 Mbps

Signaling

Status display	no
Status display present	no

Electrical properties

Nominal voltage U_N	48 V AC (Power and data)
	50 V DC (Power and data)
Nominal current I_N	6 A (Power)
	0.5 A (Data)
Transmission medium	Copper
Transmission speed	100 Mbps

Material specifications

Flammability rating according to UL 94	V0

Connector

Connection 1

Dimensional drawing	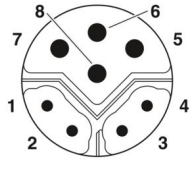 M12 hybrid plug pin assignment, 8-pos., Y-coded, pin side view
Type	M12 Plug, angled, 8-position, shielded (Advanced Shielding Technology), Keying: Y, EtherCAT®, PROFINET
Number of positions	8
Shielded	yes
Shielding	Advanced Shielding Technology
Signal type/category	EtherCAT® CAT5 (IEC 11801), 100 Mbps

	PROFINET CAT5 (IEC 11801)
Insertion/withdrawal cycles	≥ 100
Insulation resistance	≥ 100 MΩ
Overvoltage category	II
Degree of pollution	3
Tightening torque	0.4 Nm
Material Contact	CuZn
Material Contact surface	Ni/Au
Material Contact carrier	PA 6.6
Material Screw connection	Die-cast zinc, nickel-plated
Material Grip body	TPU, hardly inflammable, self-extinguishing
Material Seal	FKM
Flammability rating according to UL 94	V0
Degree of protection	IP65
	IP67
Ambient temperature (operation)	-25 °C ... 85 °C
Standard designation	M12 connector
Standards/regulations	IEC 61076-2-113

Connection 2

Type	free cable end

Cable/line

Cable length	2 m

Ethernet hybrid [94H]

Dimensional drawing	
UL AWM Style	20233 (80°C/300 V)
Number of positions	8
Shielded	yes
Cable type	Ethernet hybrid [94H]
Conductor structure	1x4x AWG 26+1x4x AWG 18
AWG signal line	26
AWG power supply	18
Conductor cross-section	4x 0.15 mm² (Data)
	4x 0.85 mm² (Power)
Wire diameter incl. insulation	1.03 mm ±0.02 mm (Data)
	1.6 mm ±0.1 mm (Power)

External cable diameter	8.80 mm ±0.2 mm
Outer sheath, material	PUR
External sheath, color	black RAL 9005
Conductor material	Bare Cu litz wires
Material wire insulation	PP (Data)
	PP (Power)
Single wire, color	white/orange, orange, white/green, green, white, blue, brown, black
Overall twist	1 star quad and 4 wires with 2 fillers
Optical shield covering	85 %
Insulation resistance	≥ 5 GΩ*km
Loop resistance	≤ 280.00 Ω/km (Data)
	≤ 45.00 Ω/km (Power)
Wave impedance	100 Ω ±5 Ω (at 100 MHz)
Differential impedance	100 Ω ±5 % (at 100 MHz)
Nominal voltage, cable	≤ 125 V (Peak value, not for high-power applications)
Test voltage Core/Core	2000 V (50 Hz, 1 min.)
Test voltage Core/Shield	2000.00 V (50 Hz, 1 min.)
Minimum bending radius, fixed installation	4 x D
Minimum bending radius, flexible installation	8 x D
Dynamic load capacity (bending)	Max. bending cycles: 2000000, Bending radius: 15 x D, Traversing path: 4.5 m, Traversing rate: 3 m/s, Acceleration: 3 m/s², Ambient temperature: -20 °C ... 60 °C
Shield attenuation	≥ 80.00 dB (30 MHz ... 100 MHz)
Halogen-free	according to IEC 60754-1
Flame resistance	UL 1581, Section 1060 and UL 2556, Section 9.3 (FT1)
	IEC 60332-1-2
Resistance to oil	in accordance with IEC 60811-404
	According to DIN EN 50363-10-2
Ambient temperature (operation)	-40 °C ... 80 °C (cable, fixed installation)
	-30 °C ... 70 °C (Cable, flexible installation)
	-20 °C ... 60 °C (for installation)
	-20 °C ... 60 °C (cable, drag chain applications)

Standards and regulations

Standard designation	M12 connector
Standards/specifications	IEC 61076-2-113

Drawings

Dimensional drawing

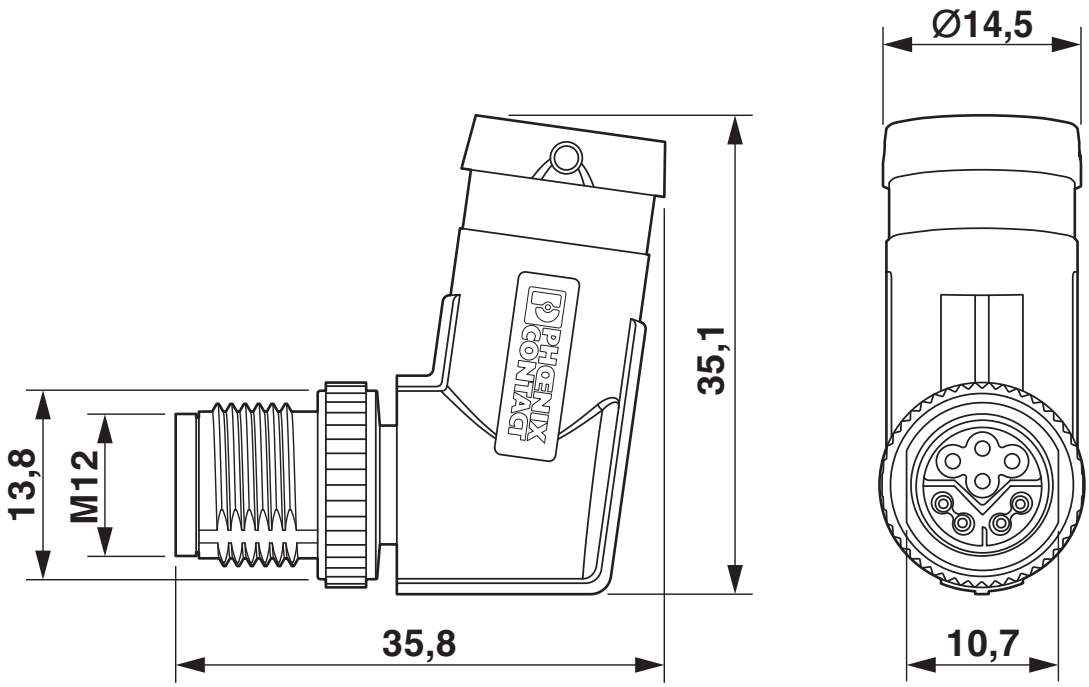

M12 x 1 male plug, angled, shielded

Schematic diagram

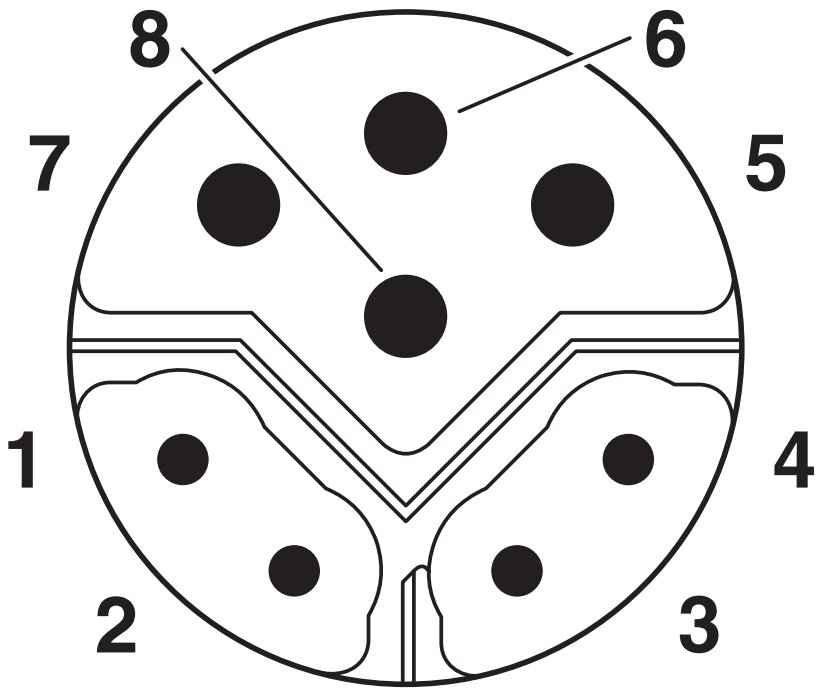

M12 hybrid plug pin assignment, 8-pos., Y-coded, pin side view

Circuit diagram

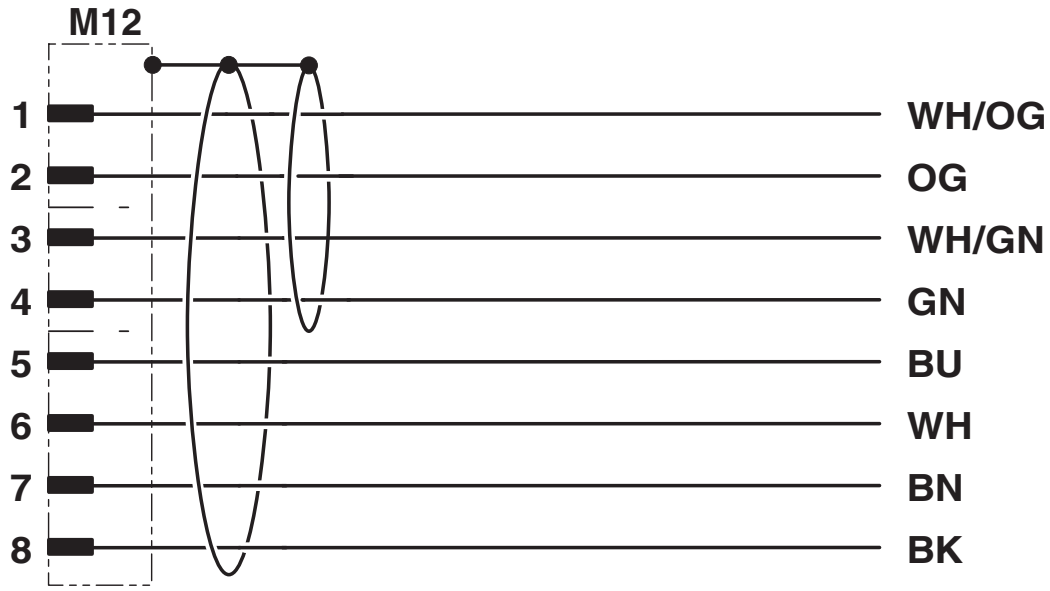

Contact assignment of the M12 plug

Approvals

To download certificates, visit the product detail page: https://www.phoenixcontact.com/us/products/1146464

UL Listed
Approval ID: FILE E 335024

	Nominal voltage U_N	Nominal current I_N	Cross section AWG	Cross section mm^2
keine				
	56.5 V	0.175 A	-	-

cUL Listed
Approval ID: E221474

	Nominal voltage U_N	Nominal current I_N	Cross section AWG	Cross section mm^2
keine				
Power	48 V	6 A	- 18	-
Data	50 V	0.5 A	- 26	-

UL Listed
Approval ID: E221474

	Nominal voltage U_N	Nominal current I_N	Cross section AWG	Cross section mm^2
keine				
Power	48 V	6 A	-	-
Data	50 V	0.5 A	-	-

Classifications

ECLASS

ECLASS-13.0	27060307
ECLASS-15.0	27060307

ETIM

ETIM 10.0	EC002599

UNSPSC

UNSPSC 21.0	26121600

Environmental product compliance

EU RoHS

Fulfills EU RoHS substance requirements	Yes, No exemptions

China RoHS

Environment friendly use period (EFUP)	EFUP-E
	No hazardous substances above the limits

EU REACH SVHC

REACH candidate substance (CAS No.)	No substance above 0.1 wt%

Phoenix Contact 2026 © - all rights reserved
https://www.phoenixcontact.com

Phoenix Contact USA
586 Fulling Mill Road
Middletown, PA 17057, United States
(+717) 944-1300
info@phoenixcon.com