MACX MCR-EX-1TS-I-OLP - Temperature measuring transducer

1145365

https://www.phoenixcontact.com/us/products/1145365

Please be informed that the data shown in this PDF document is generated from our online catalog. Please find the complete data in the user documentation. Our general terms of use for downloads are valid.



Ex i-Output loop-powered temperature transducer for transmitting RTD and TC sensor signals as well as from resistance and voltage sensors via 4 mA ... 20 mA. HART, 1-channel, Standard configuration, Screw connection

Commercial data

Item number	1145365
Packing unit	1 pc
Minimum order quantity	1 pc
Sales key	NULL
Product key	DK1243
GTIN	4063151135034
Weight per piece (including packing)	169.5 g
Weight per piece (excluding packing)	140 g
Customs tariff number	85437090
Country of origin	DE

Technical data

Product properties

Product type	Temperature transmitter
Product family	Field Analog
No. of channels	1
Configuration	Software
	HART

Insulation characteristics

Overvoltage category	II
Pollution degree	2

System properties

Functionality

Configuration	Software
	HART

Electrical properties

Electrical isolation between input and output	yes
Step response (0–99%)	1 s (TC)
	1 s (RTD)

Electrical isolation Input/output

Test voltage	2 kV AC (50 Hz, 60 s)

Supply

Supply voltage range	loop-powered, no external supply necessary
	11 V DC ... 30 V DC

Input data

Signal

Input signal	Temperature

Measurement

Number of inputs	1
Input voltage range	-20 mV ... 100 mV (Minimum measuring span: 5 mV)
Sensor types (RTD) that can be used	Pt, Ni, Cu sensors: 2, 3, 4-wire
Sensor types that can be used (TC)	A, B, C, D, E, J, K, L, N, R, S, T, U
Temperature measuring range	-250 °C ... 2500 °C (Range depending on the sensor type)
Temperature measuring range	≥ 10 K (RTD)
	≥ 50 K (TC)
Linear resistance measuring range	10 Ω ... 2000 Ω (Minimum measuring span: 10 Ω)

Output data

Signal: Current

Current output signal	4 mA ... 20 mA
	20 mA ... 4 mA
Max. current output signal	23 mA
Load	(U_L - 11 V) / 0,023 A
HART coding	FSK ± 0.5 mA
HART version	7
Transmission speed	1200 Baud
Mains frequency filter	50/60 Hz
Communication resistance	≥ 250 Ω
Switch-on delay	≈ ϕ s (HART)
	≈ ϕ s (Measured value)

Connection data

Connection method	Screw connection
Stripping length	7 mm
Screw thread	M3
Conductor cross-section rigid	0.2 mm² ... 2.5 mm²
Conductor cross-section flexible	0.2 mm² ... 2.5 mm²
Conductor cross-section AWG	24 ... 14
Tightening torque	0.5 Nm ... 0.6 Nm

Test socket

Max. diameter	2 mm

Ex data

Ex installation (EPL)	Gb
	Div. 1
Ex i circuits (EPL)	Ga
	Div. 1

Interfaces

Data communication (bypass)

Protocols supported	HART

Signaling

Status display	LED (red)

Dimensions

Dimensional drawing	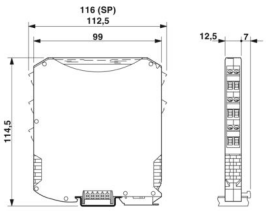
Width	12.5 mm
Height	112.5 mm
Depth	113.7 mm
Depth NS 35/7,5	114.5 mm (Snapped onto DIN rail NS 35/7,5 in accordance with EN 60715)

Material specifications

Color	gray (RAL 7042)

Environmental and real-life conditions

Ambient conditions

Degree of protection	IP20
Ambient temperature (operation)	-40 °C ... 85 °C
Ambient temperature (storage/transport)	-50 °C ... 100 °C
Altitude	≤ 4000 m (Above sea level)
Climatic class	B2
Permissible humidity (operation)	5 % ... 95 % (non-condensing)

Approvals

CE

Certificate	CE-compliant

ATEX

Identification	Ⓔx II 2 (1) G Ex ib [ia Ga] IIC T6...T4 Gb
Certificate	EPS 20 ATEX 1 166 X

IECEx

Identification	Ex ib [ia Ga] IIC T6...T4 Gb
Certificate	IECEx EPS 20.0060X

CSA

Identification	IS for Class I, Div. 2, Groups A, B, C, D; T6...T4
	AIS / Class I / Div. 1 / ABCD

Mounting

Mounting type	DIN rail mounting

Drawings

Dimensional drawing

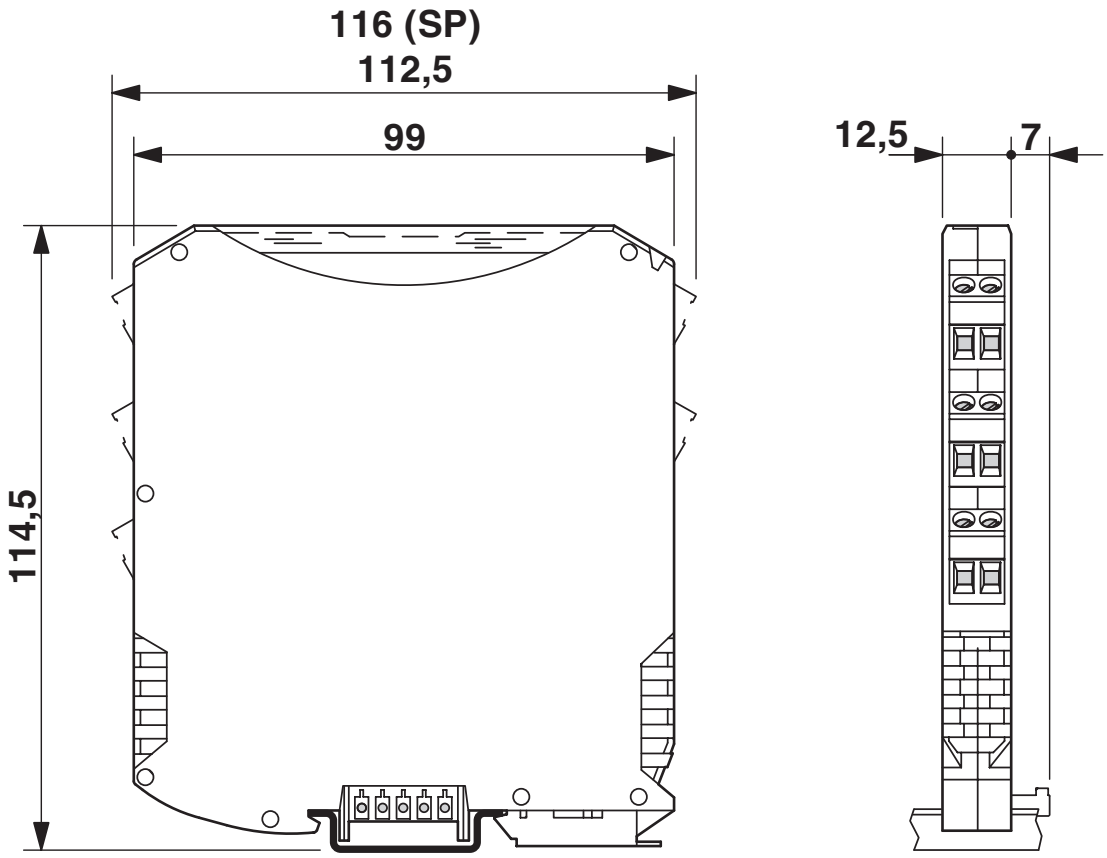

Block diagram

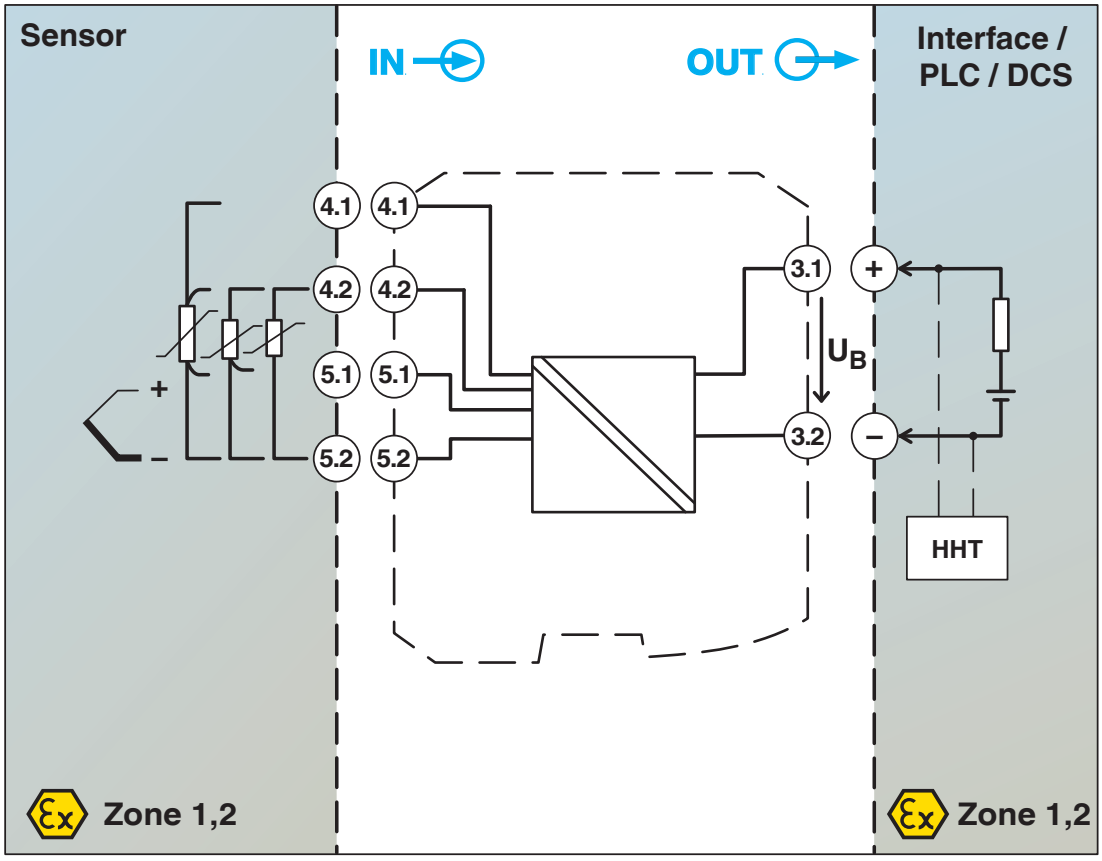

Approvals

To download certificates, visit the product detail page: https://www.phoenixcontact.com/us/products/1145365

IECEx
Approval ID: IECEx_EPS_20.0060X

CSA
Approval ID: 80070110

ATEX
Approval ID: EPS 20 ATEX 1 166 X

CSAus
Approval ID: 80070110

Classifications

ECLASS

ECLASS-13.0	27210129
ECLASS-15.0	27210129

ETIM

ETIM 10.0	EC002919

UNSPSC

UNSPSC 21.0	41112100

Environmental product compliance

EU RoHS

Fulfills EU RoHS substance requirements	Yes
Exemption	7(a), 7(c)-I

China RoHS

Environment friendly use period (EFUP)	EFUP-50
	An article-related China RoHS declaration table can be found in the download area for the respective article under "Manufacturer declaration". For all articles with EFUP-E, no China RoHS declaration table issued and required.

EU REACH SVHC

REACH candidate substance (CAS No.)	Lead(CAS: 7439-92-1)

Phoenix Contact 2026 © - all rights reserved
https://www.phoenixcontact.com

Phoenix Contact USA
586 Fulling Mill Road
Middletown, PA 17057, United States
(+717) 944-1300
info@phoenixcon.com