MACX MCR-1TS-I-OLP-SP - Temperature measuring transducer

1145196

https://www.phoenixcontact.com/us/products/1145196

Please be informed that the data shown in this PDF document is generated from our online catalog. Please find the complete data in the user documentation. Our general terms of use for downloads are valid.

CRA-READY



Output loop-powered temperature transducer for transmitting RTD and TC sensor signals as well as from resistance and voltage sensors via 4 mA ... 20 mA. HART, 1-channel, Standard configuration, Push-in connection

Commercial data

Item number	1145196
Packing unit	1 pc
Minimum order quantity	1 pc
Sales key	C401
Product key	DK1143
GTIN	4063151135713
Weight per piece (including packing)	157.4 g
Weight per piece (excluding packing)	152.1 g
Customs tariff number	85437090
Country of origin	DE

Technical data

Notes

Note on application

Note on application	As things stand now, we are preparing the product so that, as of December 11, 2027, it will comply with the requirements of the EU Cyber Resilience Act (CRA) based on the information currently available regarding the CRA.

Product properties

Product type	Temperature transmitter
Product family	Field Analog
No. of channels	1
Configuration	Software
	HART

Insulation characteristics

Overvoltage category	II
Pollution degree	2

System properties

Functionality

Configuration	Software
	HART

Electrical properties

Electrical isolation between input and output	yes
Step response (0–99%)	1 s (TC)
	1 s (RTD)

Electrical isolation Input/output

Test voltage	2 kV AC (50 Hz, 60 s)

Supply

Supply voltage range	loop-powered, no external supply necessary
	11 V DC ... 36 V DC (Standard)

Input data

Measurement

Number of inputs	1
Input voltage range	-20 mV ... 100 mV (Minimum measuring span: 5 mV)
Sensor types (RTD) that can be used	Pt, Ni, Cu sensors: 2, 3, 4-wire
Sensor types that can be used (TC)	A, B, C, D, E, J, K, L, N, R, S, T, U

Temperature measuring range	-250 °C ... 2500 °C (Range depending on the sensor type)
Temperature measuring range	≥ 10 K (RTD)
	≥ 50 K (TC)
Linear resistance measuring range	10 Ω ... 2000 Ω (Minimum measuring span: 10 Ω)

Output data

Signal: Current

Current output signal	4 mA ... 20 mA
	20 mA ... 4 mA
Max. current output signal	23 mA
Load	(U_L - 11 V) / 0,023 A
HART coding	FSK ± 0.5 mA
HART version	7
Transmission speed	1200 Baud
Mains frequency filter	50/60 Hz
Communication resistance	≥ 250 Ω
Switch-on delay	≈ ⌖ s (HART)
	≈ ⌖ s (Measured value)

Connection data

Connection method	Push-in connection
Stripping length	8 mm
Conductor cross-section rigid	0.2 mm² ... 1.5 mm²
Conductor cross-section flexible	0.2 mm² ... 1.5 mm²
Conductor cross-section AWG	24 ... 16

Ex data

Ex installation (EPL)	Gc
	Div. 2

Interfaces

Data communication (bypass)

Protocols supported	HART

Signaling

Status display	LED (red)

Dimensions

Dimensional drawing	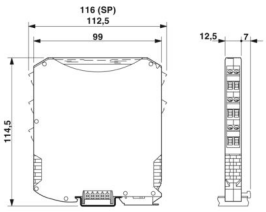
Width	12.5 mm
Height	116 mm
Depth	113.7 mm
Depth NS 35/7,5	114.5 mm (Snapped onto DIN rail NS 35/7,5 in accordance with EN 60715)

Material specifications

Color	gray (RAL 7042)

Environmental and real-life conditions

Ambient conditions

Degree of protection	IP20
Ambient temperature (operation)	-40 °C ... 85 °C
Ambient temperature (storage/transport)	-50 °C ... 100 °C
Altitude	≤ 4000 m (Above sea level)
Climatic class	B2
Permissible humidity (operation)	5 % ... 95 % (non-condensing)

Approvals

CE

Certificate	CE-compliant

ATEX

Identification	Ⓔx II 3 G Ex ec IIC T6
Certificate	PxCIF20ATEX1145192U

CSA

Identification	Ex ec IIC T6...T4

Mounting

Mounting type	DIN rail mounting

Drawings

Dimensional drawing

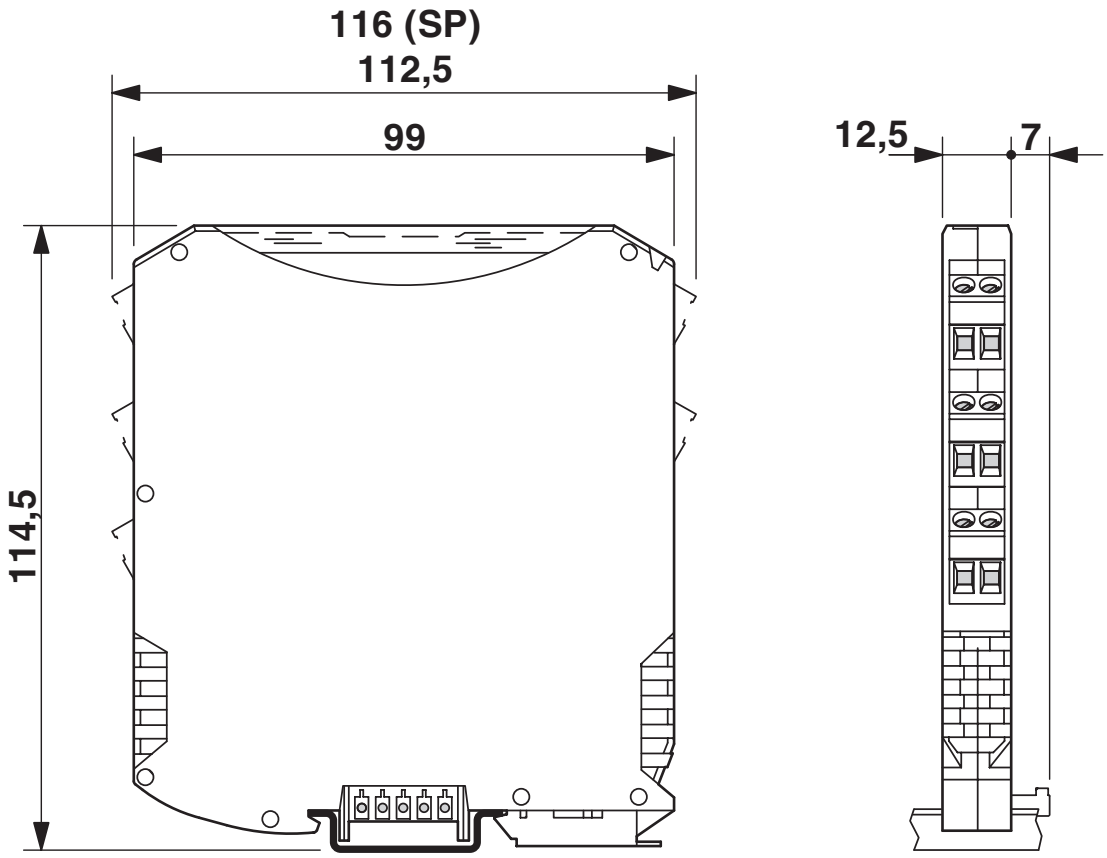

Block diagram

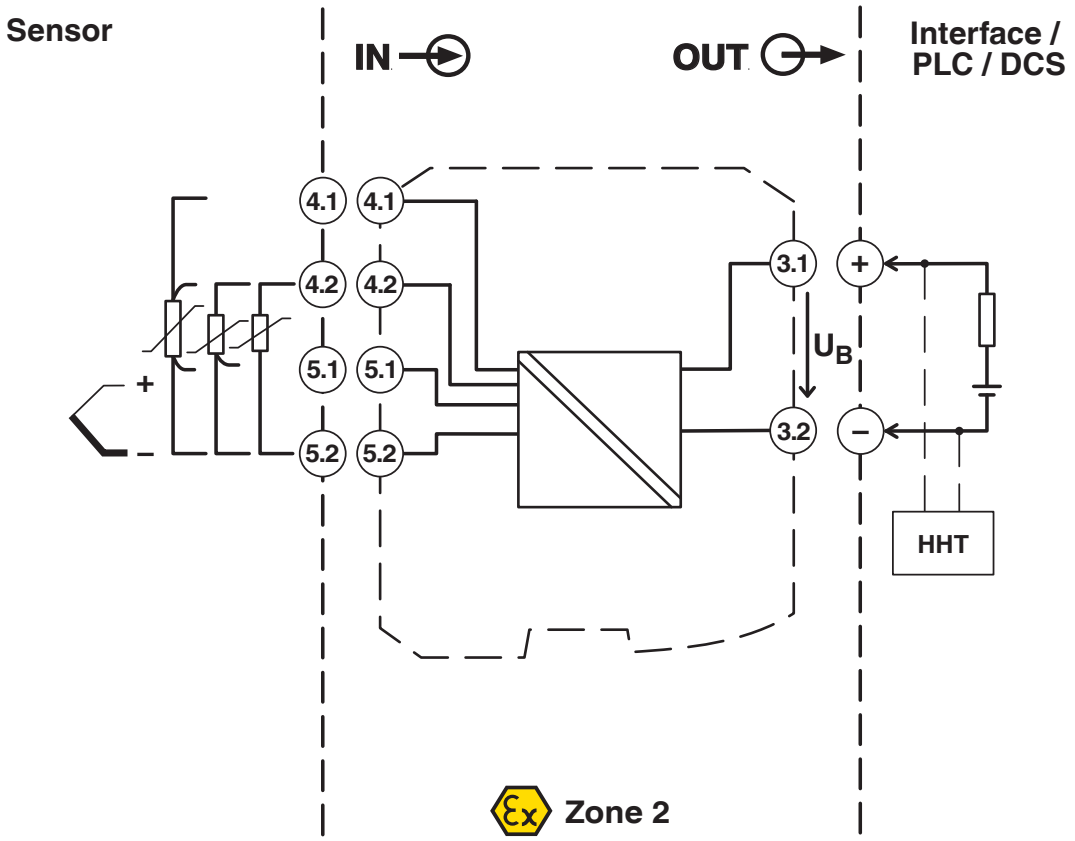

Approvals

To download certificates, visit the product detail page: https://www.phoenixcontact.com/us/products/1145196

CSA
Approval ID: 80070110

CSAus
Approval ID: 80070110

Classifications

ECLASS

ECLASS-13.0	27210129
ECLASS-15.0	27210129

ETIM

ETIM 10.0	EC002919

UNSPSC

UNSPSC 21.0	41112100

Environmental product compliance

EU RoHS

Fulfills EU RoHS substance requirements	Yes
Exemption	7(a), 7(c)-I

China RoHS

Environment friendly use period (EFUP)	EFUP-50
	An article-related China RoHS declaration table can be found in the download area for the respective article under "Manufacturer declaration". For all articles with EFUP-E, no China RoHS declaration table issued and required.

EU REACH SVHC

REACH candidate substance (CAS No.)	Lead(CAS: 7439-92-1)

EF3.1 Climate Change

CO2e kg	17.886 kg CO2e

Phoenix Contact 2026 © - all rights reserved
https://www.phoenixcontact.com

Phoenix Contact USA
586 Fulling Mill Road
Middletown, PA 17057, United States
(+717) 944-1300
info@phoenixcon.com