SOCKET FOR HR114 AND HR115 - Base module

1113840

https://www.phoenixcontact.com/us/products/1113840

Please be informed that the data shown in this PDF document is generated from our online catalog. Please find the complete data in the user documentation. Our general terms of use for downloads are valid.



Connector plate for DIN rail mounting with screw contacts for accommodating HR 114 and HR 115 auxiliary relays

Commercial data

Item number	1113840
Packing unit	1 pc
Minimum order quantity	1 pc
Product key	DTMCAA
GTIN	4063151036867
Weight per piece (including packing)	111.8 g
Weight per piece (excluding packing)	69 g
Country of origin	DE

Technical data

Notes

Note on application

Note on application	Only for industrial use

Product properties

Product type	Flush-type base

Drawings

Dimensional drawing

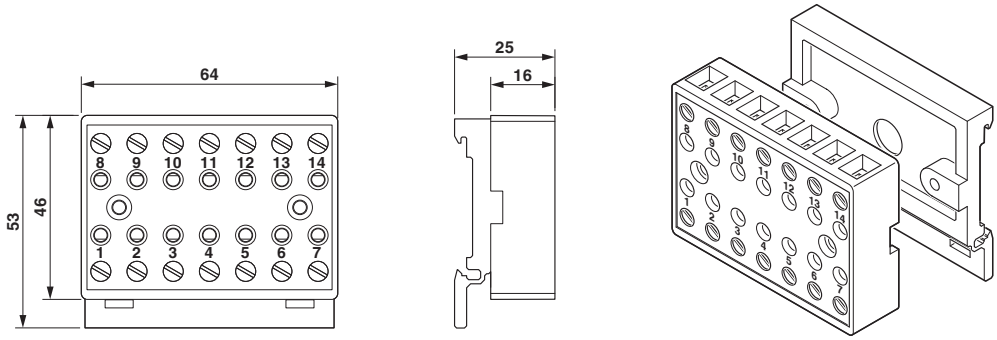

Classifications

ECLASS

ECLASS-13.0	27371692
ECLASS-15.0	27371692

ETIM

ETIM 10.0	EC002586

UNSPSC

UNSPSC 21.0	39122300

Environmental product compliance

China RoHS

Environment friendly use period (EFUP)	EFUP-25
	An article-related China RoHS declaration table can be found in the download area for the respective article under "Manufacturer declaration". For all articles with EFUP-E, no China RoHS declaration table issued and required.

EU REACH SVHC

REACH candidate substance (CAS No.)	No substance above 0.1 wt%

EF3.1 Climate Change

CO2e kg	40.208 kg CO2e

Phoenix Contact 2026 © - all rights reserved
https://www.phoenixcontact.com

Phoenix Contact USA
586 Fulling Mill Road
Middletown, PA 17057, United States
(+717) 944-1300
info@phoenixcon.com