EV-T2M4CC-DC200A-10M50ESBK11 - DC charging cable

1106962

https://www.phoenixcontact.com/us/products/1106962

Please be informed that the data shown in this PDF document is generated from our online catalog. Please find the complete data in the user documentation. Our general terms of use for downloads are valid.



CHARX connect standard, CCS type 2, DC charging cable, up to 500 A in Boost mode, 200 A permanent, 1000 V DC, with vehicle charging connector and open cable end, Local production, cable: 10 m, black, straight, with connected PP contact, with replaceable mating face frame, with analog temperature sensors, no liquid cooling, PHOENIX CONTACT logo, NOTE: The cable length exceeds the normative specification of 10 m., IEC 62196-3, for charging electric vehicles (EV) with direct current (DC)

Product description

DC charging cable with vehicle charging connector and free cable end for fast charging of electric vehicles (EV) with direct current (DC) via CCS type 2 vehicle charging inlets, for installation at charging stations for e-mobility (EVSE)

Your advantages

- Complete product range
- The right charging cable for every application, from the carport to the charging park
- Convenient handling due to the ergonomic design
- Available with your logo on request - for consistent branding of your charging station
- Developed and produced in accordance with the IATF 16949 automotive standard and ISO 9001

Commercial data

Item number	1106962
Packing unit	1 pc
Minimum order quantity	1 pc
Sales key	EM01
Product key	XWBMFE
GTIN	4063151005405
Weight per piece (including packing)	16,980 g
Weight per piece (excluding packing)	16,980 g
Customs tariff number	85444290
Country of origin	PL

Technical data

Product properties

Product type	DC charging cable
Product family	CHARX connect standard
Type	DC charging cable
	with vehicle charging connector and open cable end
	Local production
Design	with connected PP contact
	with replaceable mating face frame
	with analog temperature sensors
	no liquid cooling
Charging standard	CCS type 2
Charging mode	Mode 4
Affixed logo	PHOENIX CONTACT logo
Label	14.1 mm x 44.8 mm (customer logo on request)

Electrical properties

Temperature monitoring	2x Pt 1000

Charging power and current (DC charging)

Type of charging current	DC
Charging current	200 A DC
Charging power	200 kW
Rated voltage	1000 V

Charging power and current (DC charging in Boost Mode)

Type of charging current	DC Boost Mode
Charging current	up to 500 A DC
Charging power	up to 500 kW
Rated voltage	1000 V
Note	The specifications refer to charging in Boost Mode and are dependent on ambient conditions. For further details, see the packing slip in the download area.

Pin assignment (Power contacts)

Note on the connection method	Crimp connection, cannot be disconnected
Number	3 (PE, DC+, DC-)
Rated voltage	1000 V DC
Rated current	200 A (up to 40 °C)

Pin assignment (Signal contacts)

Note on the connection method	Crimp connection, cannot be disconnected
Type of signal transmission	Pulse width modulation with modulated Powerline communication in accordance with ISO/IEC 15118 / DIN SPEC 70121

Number	2 (CP, PP)
Rated voltage	30 V AC
Rated current	2 A
Coding	1500 Ω (between PE and PP)
	PP signal contact connected to cable

Temperature sensors (Pt 1000)

Sensor type	Pt 1000
Standards/regulations	DIN EN 60751
Attachment point	Sensor for the DC contacts
Switch-off temperature	90 °C ±1 K (equivalent to a Pt 1000 value of 1346.5 Ω)
Long-term stability	0.06 % (after 1000 hours at 130 °C)
Recommended measured current	1 mA (1 V at 0°C)
Coefficient	3850 ppm/K
Ambient temperature	-50 °C ... 130 °C (Operation)

Dimensions

Vehicle charging connector

Width	75 mm
Height	139 mm
Depth	267 mm

Material specifications

Color (Housing)	black (9005)
Color (Handle area)	gray (7042)
Color (Mating face)	black (9005)
Color (Protective cap)	black (9005)
Color (Cable)	black (9005)
Material (Vehicle charging connector)	Plastic
Material (Cable outer sheath)	TPE-U
Material (Contact surface)	Silver
Note	The color appearance and gloss level of the charging cable may vary.

Cable/line

Cable length	10 m ±45 mm
Wiring standards/regulations	prEN 50620/DIN EN 50620
Wiring certifications	VDE-Reg.
Cable weight	max. 1620.00 kg/km
Cable type	Class 6
Cable type	straight
Cable structure	2 x 50 mm² + 1 x 25 mm² + 3 x 2 x 0.75 mm²
External cable diameter	28.10 mm ±0.5 mm
Outer sheath, material	TPE-U

Stripping length of the sheath	140 mm ±10 mm
Stripping length	140 mm ±10 mm
Cable resistance	≤ 0.00039 Ω/m (based on a power core, at an ambient temperature of 20°C)
Bending radius	min. 281 mm (10x Ø)

Mechanical properties

Mechanical data

Insertion/withdrawal cycles	> 10000
Insertion force	< 100 N
Withdrawal force	< 100 N

Environmental and real-life conditions

Ambient conditions

Degree of protection (Vehicle charging connector)	IP44 (plugged in; when plugged in and ready to operate, the degree of protection is only ensued if both plug-in components are original products from Phoenix Contact or suitable standard-compliant products)
Ambient temperature (operation)	-30 °C ... 40 °C
	max. 55 °C (Current reduction required, observe the DC contact temperature limit value of 90°C)
Ambient temperature (storage/transport)	-40 °C ... 80 °C
Altitude	5000 m (above sea level)

Standards and regulations

Connection in accordance with standard

Normative cable length restrictions	NOTE: The cable length exceeds the normative specification of 10 m.
	Interference-free V2G communication in accordance with ISO 15118 is not guaranteed for cable lengths over 10 m (ISO IEC 15118-3, A.11.3, Table A.11).
	Cable management is required in the US if the cable length exceeds 7.5 m (IEC 61851-1).
Standards/specifications	IEC 62196-3
Note	Compliant with AFIR - EU 2025/656
Note	Test voltage for insulation resistance measurement in accordance with IEC 62196-1:2022 between CP and PE/PP < 24 V

Drawings

Dimensional drawing

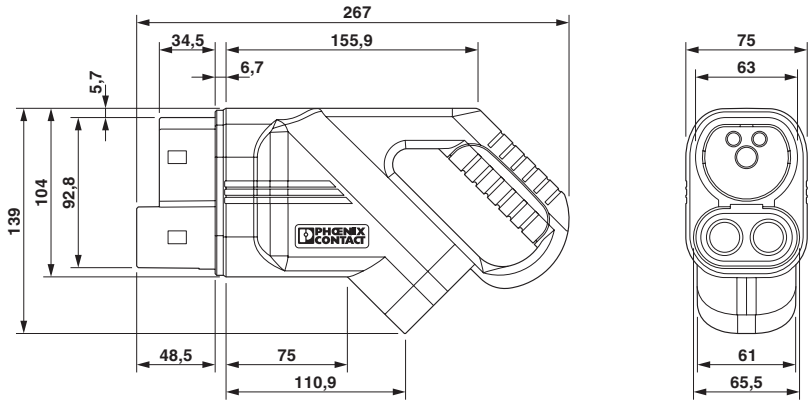

Make sure that the vehicle charging connector is placed in an appropriate charging connector holder, which ensures a minimum protection rating of IP24 in accordance with IEC 61851-1, for the entire time between charging. To create this charging connector holder, use the dimensions of the vehicle charging connector. Detailed dimensions can also be found in the Download area.

Schematic diagram

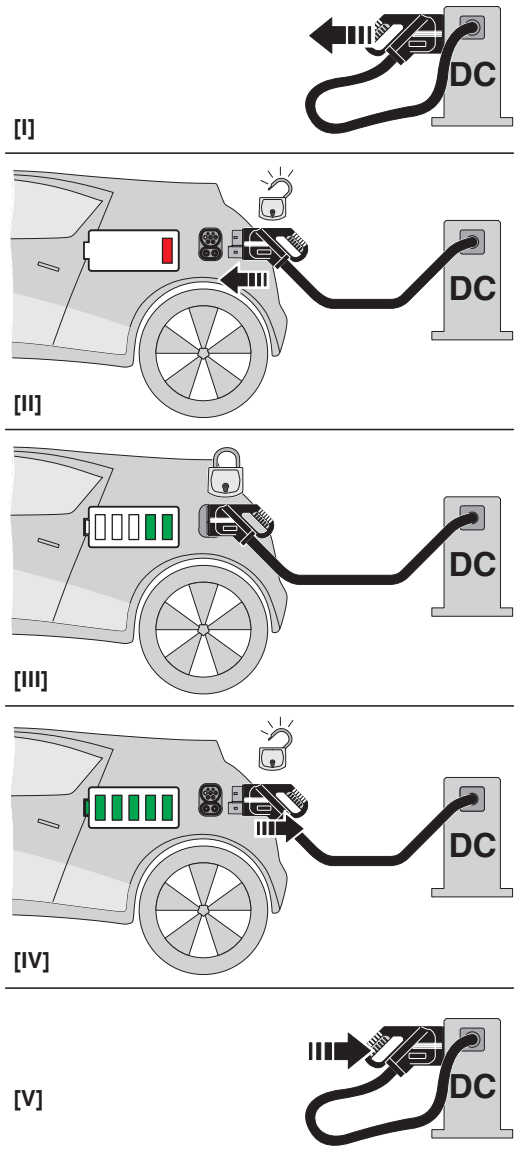

Operating instructions

Schematic diagram

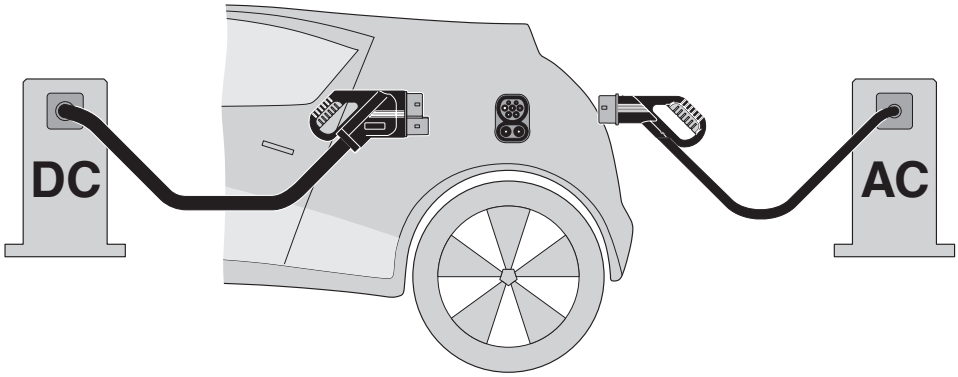

The Combined Charging System (CCS) principle - standard-compliant charging system for electric vehicles, which supports both conventional AC charging and fast DC charging. Both Vehicle Connectors fit into the CCS Vehicle Inlet.

Schematic diagram

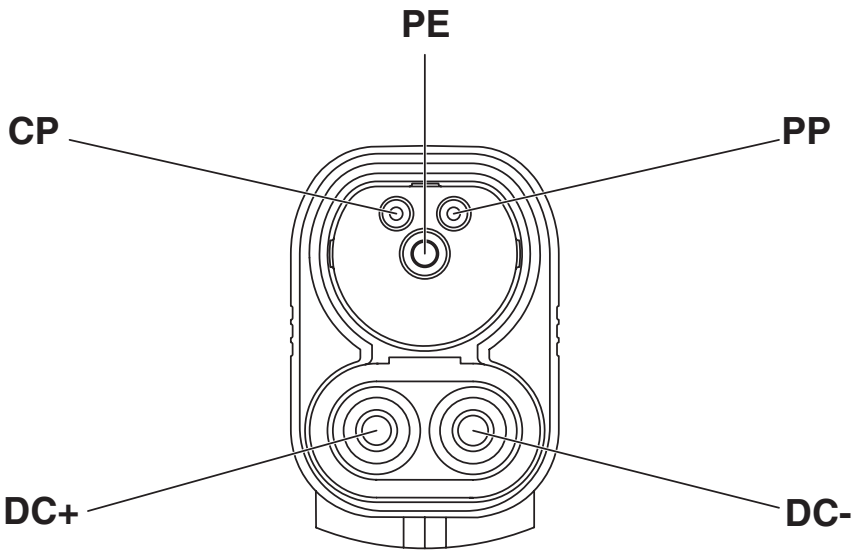

Pin assignment of the Vehicle Connector

Schematic diagram

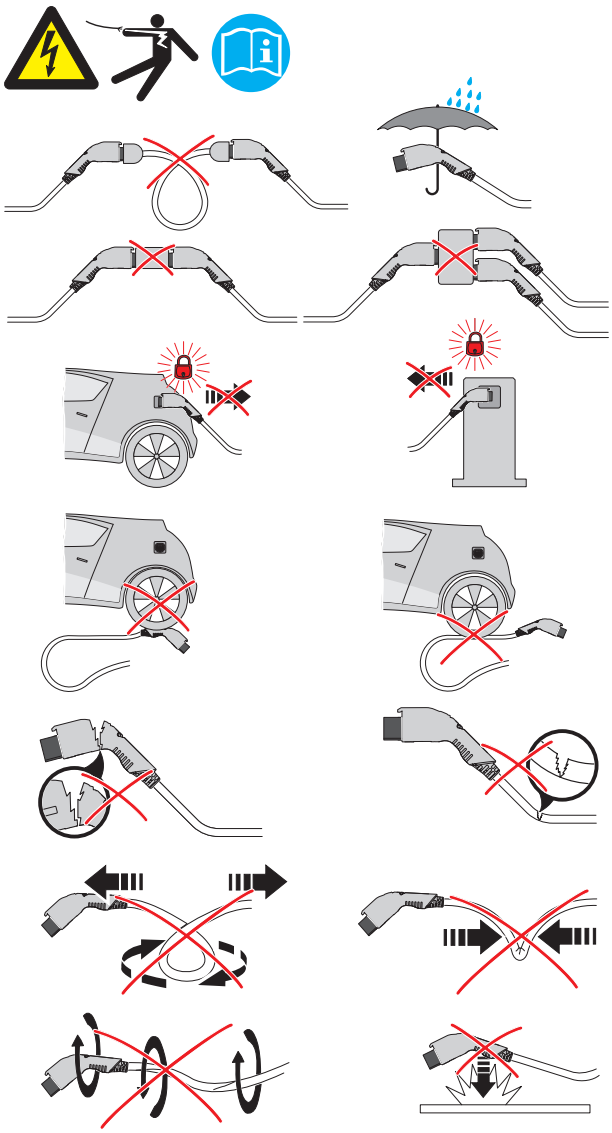

Warnings regarding use

Schematic diagram

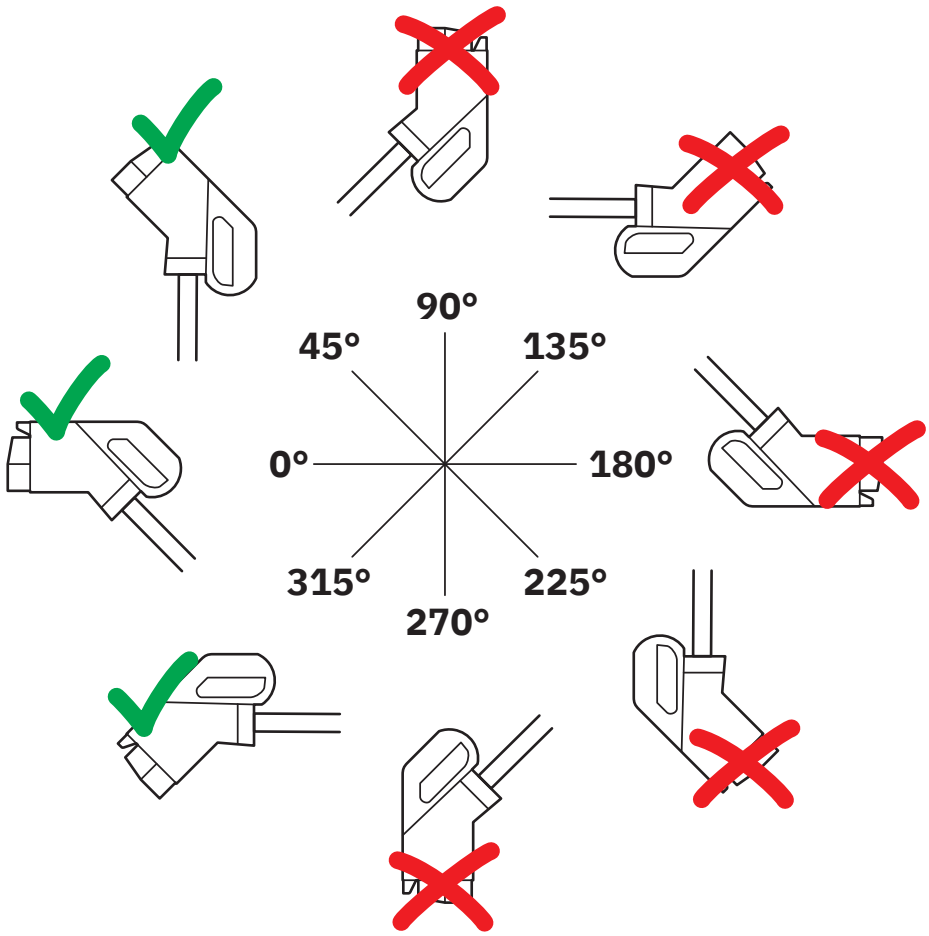

The resting position must be installed in the charging station such that the user cannot hang up the vehicle connector upside down (90° to 270°). However, positions rotated upward (45°) or downward (315°) are options for a resting position.

Approvals

To download certificates, visit the product detail page: https://www.phoenixcontact.com/us/products/1106962

IECEE CB Scheme
Approval ID: DE1-65588/M3/A1

	Nominal voltage U_N	Nominal current I_N	Cross section AWG	Cross section mm^2
keine				
	1000 V	200 A	-	-

Classifications

ECLASS

ECLASS-13.0	27144705
ECLASS-15.0	27144705

ETIM

ETIM 10.0	EC002897

UNSPSC

UNSPSC 21.0	39121500

Environmental product compliance

EU RoHS

Fulfills EU RoHS substance requirements	Yes
Exemption	6(c), 7(c)-I

China RoHS

Environment friendly use period (EFUP)	EFUP-10
	An article-related China RoHS declaration table can be found in the download area for the respective article under "Manufacturer declaration". For all articles with EFUP-E, no China RoHS declaration table issued and required.

EU REACH SVHC

REACH candidate substance (CAS No.)	Lead(CAS: 7439-92-1)
	Bis(2-(2-methoxyethoxy)ethyl)ether(CAS: 143-24-8)
SCIP	d2e0bc3b-33dd-4c3f-b029-df2720188417

Phoenix Contact 2026 © - all rights reserved
https://www.phoenixcontact.com

Phoenix Contact USA
586 Fulling Mill Road
Middletown, PA 17057, United States
(+717) 944-1300
info@phoenixcon.com