PSR-CT-GWY-1DGN-IOL-PI - Data interface

1106407

https://www.phoenixcontact.com/us/products/1106407

Please be informed that the data shown in this PDF document is generated from our online catalog. Please find the complete data in the user documentation. Our general terms of use for downloads are valid.

CRA-READY



Gateway module for acquiring standard status and diagnostic data from PSR-CT safety switches and forwarding data packets to an IO-Link master

Product description

The gateway is an IO-Link communication module for acquiring standard status and diagnostic data from PSR-CT safety switches and forwarding data packets to an IO-Link master.

Your advantages

- LED displays for current connection, IO-Link communication establishment, and connected sensors
- Protection class IP20 for installation in control cabinets
- Low housing width of just 12.5 mm
- Tool-free and time-saving installation thanks to Push-in technology
- Compatible with products of the PSRswitch range with integrated diagnostics channel

ELEKTROGERÄTE RÜCKNAHME

Commercial data

Item number	1106407
Packing unit	1 pc

Minimum order quantity	1 pc
Product key	DNA61Z
GTIN	4063151003012
Weight per piece (including packing)	93.824 g
Weight per piece (excluding packing)	70.689 g
Country of origin	DE

Technical data

Notes

Note on application	Only for industrial use
Note on application	As things stand now, we are preparing the product so that, as of December 11, 2027, it will comply with the requirements of the EU Cyber Resilience Act (CRA) based on the information currently available regarding the CRA.

Product properties

Product type	Gateways/Proxies
Special properties	The product is being prepared for compliance with the Cyber Resilience Act (CRA)

Insulation characteristics

Overvoltage category	II
Degree of pollution	2

Electrical properties

Maximum power dissipation for nominal condition	0.9 W (when IO-Link is inactive)
Nominal operating mode	100% operating factor
Rated insulation voltage	30 V

Supply

Designation	L+/L-
Nominal voltage for I/O supply	24 V DC -20 % / +25 % (Provided via the IO-Link interface of the IO-Link master.)
Current consumption	typ. 14 mA (if the switch chain is active, normal operation)
	typ. 13 mA (if the switch chain is inactive)
Protective circuit	Serial protection against polarity reversal
	Suppressor diode

Supply

Designation	24V/GND
Inrush current	typ. 3.1 A (Δt < 1.2 ms)
Filter time	1 ms (in the event of voltage dips)
Power consumption at U_D	typ. 0.1 W (IO-Link active, normal operation)
	typ. 0.85 W (IO-Link inactive)
Protective circuit	Serial protection against polarity reversal
	Suppressor diode

Input data

Digital: Diagnostic input (DGN)

Description of the input	Potential 24 V/GND or U_S
Number of inputs	1
Input voltage range	0 V DC ... 30 V DC

Protective circuit	Suppressor diode
Current consumption	typ. 30 mA

IO-Link

Designation	IO-Link
Description of the input	IO-Link switching and communication cable
Number of inputs	1
Connection method	Push-in connection
Connection technology	3-conductor
Number of ports	1
Port type	Class A

Connection data

Connection method	Push-in connection
Stripping length	10 mm

Signaling

Status display	2 x LED (green, yellow)
Operating voltage display	1 x LED (green, yellow, red)

Dimensions

Width	12.5 mm
Height	108 mm
Depth	114.5 mm

Material specifications

Color (Housing)	gray (RAL 7042)
Housing material	PA

Environmental and real-life conditions

Ambient conditions

Degree of protection	IP20
Min. degree of protection of inst. location	IP54
Ambient temperature (operation)	-25 °C ... 60 °C
Ambient temperature (storage/transport)	-40 °C ... 85 °C
Maximum altitude	≤ 2000 m
Max. permissible humidity (storage/transport)	75 % (on average, 85% infrequently, non-condensing)
Max. permissible relative humidity (operation)	75 % (on average, 85% infrequently, non-condensing)
Shock	15g
Vibration (operation)	10 Hz ... 150 Hz, 5g

Approvals

CE

Certificate	CE-compliant

Mounting

Mounting type	DIN rail mounting
Mounting position	vertical or horizontal

Drawings

Block diagram

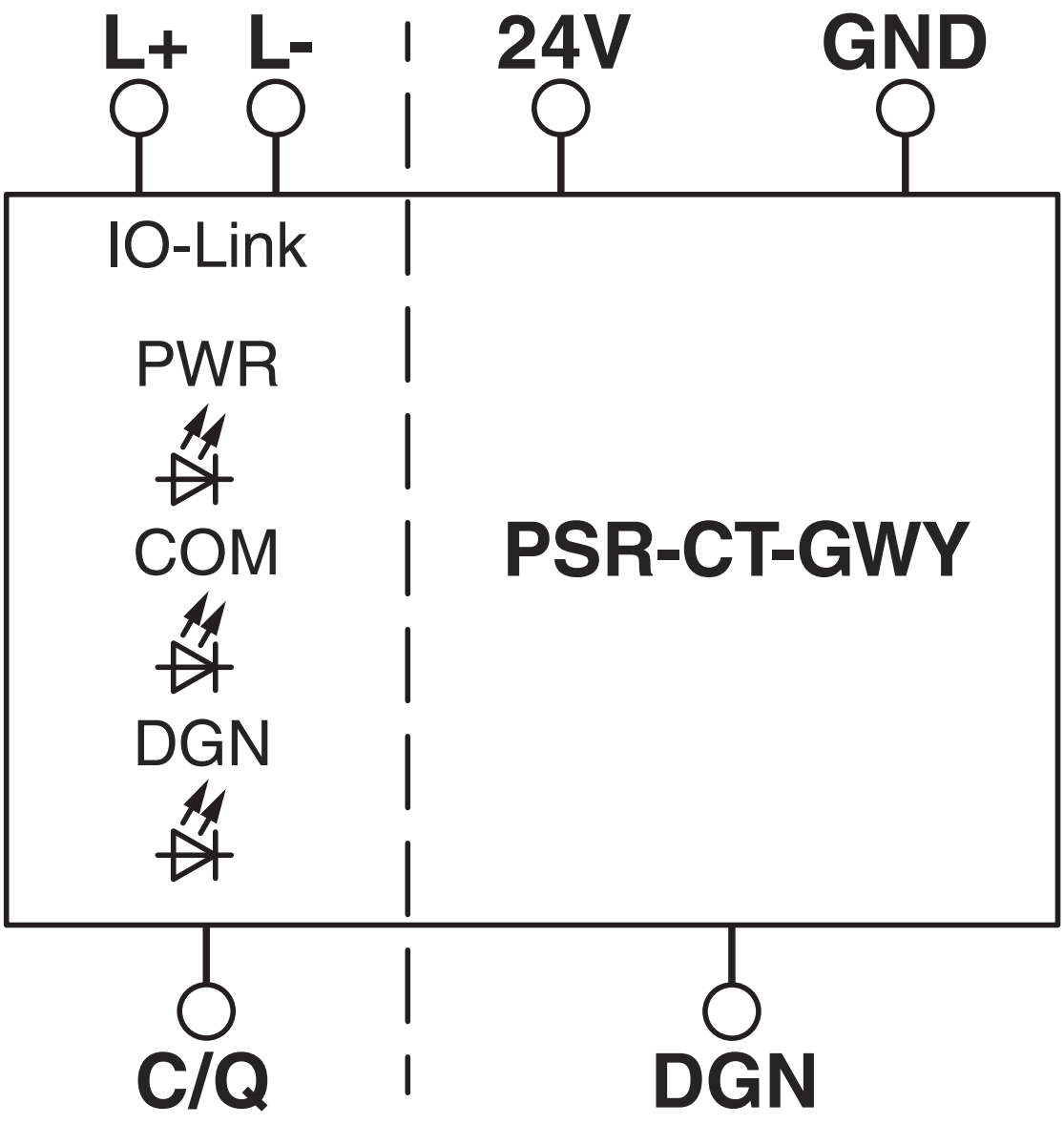

Block diagram

Approvals

To download certificates, visit the product detail page: https://www.phoenixcontact.com/us/products/1106407

cULus Listed
Approval ID: E140324

Classifications

ECLASS

ECLASS-13.0	27242608
ECLASS-15.0	27242608

ETIM

ETIM 10.0	EC001604

UNSPSC

UNSPSC 21.0	32151600

Environmental product compliance

EU RoHS

Fulfills EU RoHS substance requirements	Yes
Exemption	7(a), 7(c)-I

China RoHS

Environment friendly use period (EFUP)	EFUP-50
	An article-related China RoHS declaration table can be found in the download area for the respective article under "Manufacturer declaration". For all articles with EFUP-E, no China RoHS declaration table issued and required.

EU REACH SVHC

REACH candidate substance (CAS No.)	Lead(CAS: 7439-92-1)
SCIP	391c82cd-fa85-4faa-99bb-0595151116f3

Phoenix Contact 2026 © - all rights reserved
https://www.phoenixcontact.com

Phoenix Contact USA
586 Fulling Mill Road
Middletown, PA 17057, United States
(+717) 944-1300
info@phoenixcon.com