PSR-M-EF8-SDI8-SDO2-DO2-PI - Extension module

1105523

https://www.phoenixcontact.com/us/products/1105523

Please be informed that the data shown in this PDF document is generated from our online catalog. Please find the complete data in the user documentation. Our general terms of use for downloads are valid.

CRA-READY



Safe extension module with 8 safe inputs and 2 safe outputs, 2 reset inputs, 2 signal outputs, 4 clock outputs, TBUS interface, up to SIL 3, Cat. 4/PL e, pluggable Push-in terminal block, TBUS connector included

Product description

The configurable and individually scalable PSRmodular safety system is a flexible safety solution for monitoring your machine or system. The safe extension module provides the system additional safe inputs and outputs as well as signal outputs.

Your advantages

- Cost-effective safety solution with a high level of adaptability to individual requirements
- Fast startup, thanks to easy hardware and software configuration
- Machine downtimes minimized with comprehensive, easy-to-understand diagnostics
- Tool-free and time-saving installation thanks to Push-in technology
- Low housing width of just 22.6 mm
- Up to Cat. 4/PL e in accordance with ISO 13849-1, SIL 3 in accordance with EN IEC 62061, SIL 3 in accordance with IEC 61508
- Suitable for elevator applications in accordance with EN 81-20

ELEKTROGERÄTE RÜCKNAHME

Commercial data

Item number	1105523
Packing unit	1 pc
Minimum order quantity	1 pc
Sales key	DN02
Product key	DNA362
GTIN	4055626988313
Weight per piece (including packing)	174.4 g
Weight per piece (excluding packing)	141 g
Customs tariff number	85371098
Country of origin	IT

Technical data

Notes

Note on application	Only for industrial use
Note on application	As things stand now, we are preparing the product so that, as of December 11, 2027, it will comply with the requirements of the EU Cyber Resilience Act (CRA) based on the information currently available regarding the CRA.

Product properties

Product type	Safety device
Application	Emergency stop
	Light grid
	Safety door
	Safe shutdown
Control	1 and 2 channel
Special properties	The product is being prepared for compliance with the Cyber Resilience Act (CRA)

Insulation characteristics

Protection class	III

Insulation characteristics

Overvoltage category	II
Degree of pollution	2

Times

Response time	see user manual
Restart time	min. 5 s (Boot time)
	max. 10 s (Boot time)

Electrical properties

Maximum power dissipation for nominal condition	5.88 W (with max. permissible load)
Nominal operating mode	100% operating factor
Interfaces	DIN rail TBUS for connection to the master module, supplied as standard
Rated surge voltage/insulation	Basic insulation 4 kV between 24 V power supply and I/Os to the housing

Supply

Designation	A1/A2
Rated control circuit supply voltage U_S	19.2 V DC ... 28.8 V DC
Rated control circuit supply voltage U_S	24 V DC -20 % / +20 % (provide external protection, typically 8 A)
Rated control supply current I_S	typ. 40 mA (Outputs inactive)
	typ. 55 mA (Outputs active, without load)
Power consumption at U_S	typ. 0.96 W (Outputs inactive)

Inrush current	< 9 A (Δt = 1 ms at U_s)
Filter time	typ. 5 ms (at A1 in the event of voltage dips at U_s)
Protective circuit	Serial protection against polarity reversal

Input data

Digital: IN1, IN2, IN3, IN4, IN5, IN6, IN7, IN8

Description of the input	Safety-related digital inputs
	IEC 61131-2 type 1
Number of inputs	8
Input voltage range "0" signal	0 V DC ... 5 V DC
Input voltage range "1" signal	15 V DC ... 28.8 V DC
Input current range "0" signal	< 1 mA
Filter time	min. 3 ms ±2 ms (adjustable)
	max. 250 ms ±2 ms (adjustable)
	Test pulse rate ≥ 2x set filter time, min. Test pulse rate = 10 ms
Cable length	max. 100 m (per input)
Max. permissible overall conductor resistance	max. 1.2 kΩ (Input and reset circuit at U_S)
Current consumption	typ. 8 mA (typ. with U_S)
	max. 10 mA (at a control voltage of 28.8 V DC)

Digital: Reset inputs (FBK1, FBK2)

Description of the input	IEC 61131-2 type 3
Number of inputs	2
Input voltage range "0" signal	0 V DC ... 5 V DC
Input voltage range "1" signal	11 V DC ... 28.8 V DC
Input current range "0" signal	< 1 mA
Filter time	250 ms ±2 ms (Test pulse rate > 500 ms)
Cable length	max. 100 m (per input)
Max. permissible overall conductor resistance	1.2 kΩ (Input and reset circuit at U_S)
Current consumption	typ. 10 mA (typ. with U_S)
	max. 13 mA (at a control voltage of 28.8 V DC)

Output data

Digital: O1A, O1B, O2A, O2B

Output description	Safety-related digital outputs
	PNP, OSSD
	IEC 61131-2 type 0.5 (observe limiting continuous current)
Number of outputs	4 (can be used as 2 x 2 channel outputs)
Short-circuit protection	Yes (self-limitation at 1.1 A)
Leakage current	max. 500 µA
Cable length	max. 100 m (per output)
Ohmic load	min. 50 Ω (Observe limiting continuous current)
Max. capacitive load	max. 680 nF
Max. inductive load	max. 1.4 mH

Limiting continuous current	400 mA (per channel)
	1.6 A (Total current of all safe digital outputs)
Inrush current	max. 750 mA ($\Delta t \leq$ ⎍ s)
Nominal output voltage	24 V DC (Supply via A1)
Nominal output voltage range	18 V DC ... 27.6 V DC (U_S - 1.2 V)
Switching frequency	max. 1/(4 x t_{Cycle}) [Hz]
Output voltage when switched off	< 1.5 V
Test pulses	< 80 µs (Test pulse width of low test pulses)
	Test pulse rate for low test pulses > 2 x T_{Cycle}
	< 20 µs (Test pulse width, high test pulse)
	≥ 1.5 s (Test pulse rate, high test pulse)
Discharging circuit	Yes, internal

Signal: MO1, MO2

Output description	PNP, IEC 61131-2 Typ 0,1
	non-safety-related
Number of outputs	2
Output voltage when switched off	max. 0.1 V
Output voltage range	18.2 V DC ... 27.8 V DC (U_S - 1 V)
Voltage	24 V DC (via A1)
Maximum inrush current	1.1 A (Δt = 3 s at U_s)
Limiting continuous current	100 mA (per channel)
	200 mA (Total current of all digital signal outputs)
Leakage current	max. 100 µA
Ohmic load	min. 180 Ω (Observe limiting continuous current)
Switching frequency	max. 1/(4 x t_{Cycle}) [Hz]
Short-circuit protection	Yes (self-limitation at 1.1 A)
Discharging circuit	No
Cable length	max. 100 m (per output)

Clock: T1, T2, T3, T4

Output description	PNP, IEC 61131-2 type 0.5
Number of outputs	4
Voltage	24 V DC (via A1)
Output voltage when switched off	max. 0.1 V
Maximum inrush current	1.1 A (Δt = 3 s at U_s)
Limiting continuous current	100 mA (per channel)
	400 mA (Total current of all outputs)
Leakage current	max. 100 µA
Test pulses	≤ 220 µs (Test pulse duration)
	Test pulse rate = 8 x t_{Cycle} [ms]
Short-circuit protection	Yes (self-limitation at 1.1 A)
Cable length	max. 100 m (per output)
Max. capacitive load	max. 470 nF
Max. inductive load	max. 2.4 mH

Discharging circuit	Yes, internal

Connection data

Connection technology

pluggable	yes

Conductor connection

Connection method	Push-in connection
Conductor cross-section rigid	0.2 mm² ... 2.5 mm²
Conductor cross-section flexible	0.2 mm² ... 2.5 mm²
Conductor cross-section AWG	24 ... 14
Stripping length	10 mm

Signaling

Status display	1 x LED (green), 2 x LED (orange)
	12 x LED (yellow)
	2 x LED (green, red)
Operating voltage display	1 x LED (green)
Error indication	2 x LED (red)

Dimensions

Width	22.61 mm
Height	107.74 mm
Depth	113.6 mm

Material specifications

Color (Housing)	yellow (RAL 1018)
Housing material	Polyamide PA non-reinforced

Characteristics

Safety data

Stop category (EN 60204-1)	0

Safety data: EN ISO 13849

Performance level (PL)	e (2-channel wiring)
	d (1-channel wiring)

Safety data: IEC 61508 - High-demand for 2-channel wiring

Safety Integrity Level (SIL)	3

Safety data: IEC 61508 - High-demand for 1-channel wiring

Safety Integrity Level (SIL)	2

Safety data: EN IEC 62061

Safety Integrity Level (SIL)	3 (2-channel wiring)
	2 (1-channel wiring)

Environmental and real-life conditions

Ambient conditions

Degree of protection	IP20
Min. degree of protection of inst. location	IP54
Ambient temperature (operation)	-10 °C ... 55 °C (observe derating)
Ambient temperature (storage/transport)	-20 °C ... 85 °C
Maximum altitude	≤ 2000 m (Above sea level)
Max. permissible humidity (storage/transport)	95 % (non-condensing)
Max. permissible relative humidity (operation)	95 % (non-condensing)
Shock	10g for Δt = 16 ms (continuous shock, 1000 shocks in each space direction)
Vibration (operation)	10 Hz ... 150 Hz, 2g

Approvals

CE

Identification	CE-compliant

Mounting

Mounting type	DIN rail mounting
Assembly note	Observe derating
Mounting position	vertical or horizontal

Drawings

Application drawing

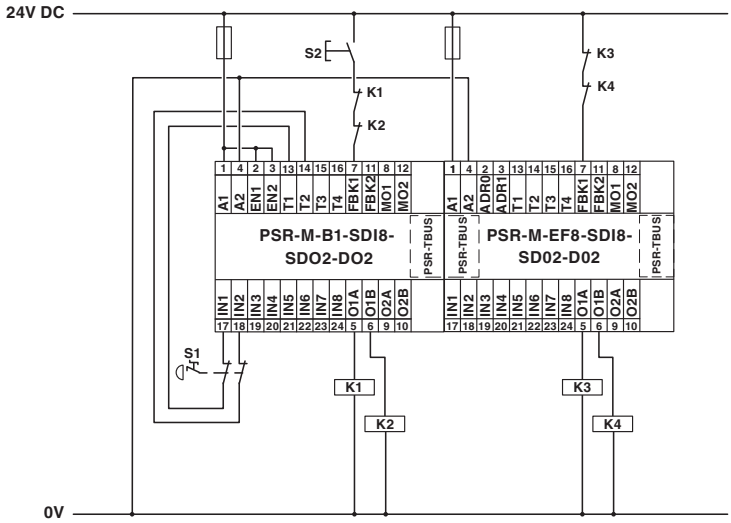

Example application

Block diagram

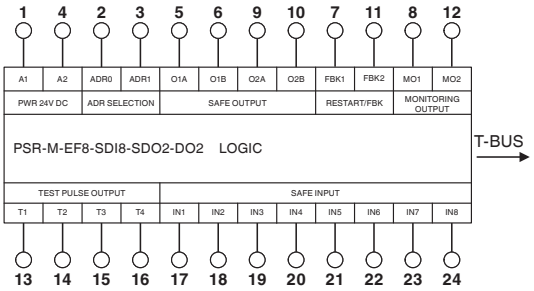

Block diagram

Approvals

To download certificates, visit the product detail page: https://www.phoenixcontact.com/us/products/1105523

cULus Listed
Approval ID: E238705

Functional Safety
Approval ID: Z10029429 0013Rev.02

Classifications

ECLASS

ECLASS-13.0	27371819
ECLASS-15.0	27371819
ECLASS-15.0 ASSET	27250101

ETIM

ETIM 10.0	EC001449

UNSPSC

UNSPSC 21.0	39122200

Environmental product compliance

EU RoHS

Fulfills EU RoHS substance requirements	Yes, No exemptions

China RoHS

Environment friendly use period (EFUP)	EFUP-E
	No hazardous substances above the limits

EU REACH SVHC

REACH candidate substance (CAS No.)	No substance above 0.1 wt%

Phoenix Contact 2026 © - all rights reserved
https://www.phoenixcontact.com

Phoenix Contact USA
586 Fulling Mill Road
Middletown, PA 17057, United States
(+717) 944-1300
info@phoenixcon.com