PSR-M-TBUS1-PI - Extension module

1105096

https://www.phoenixcontact.com/us/products/1105096

Please be informed that the data shown in this PDF document is generated from our online catalog. Please find the complete data in the user documentation. Our general terms of use for downloads are valid.



Safe extension module for local bus extension, 1 function channel, TBUS interface, up to SIL 3, Cat. 4/PL e, plug-in Push-in terminal block, TBUS connector included

Product description

The configurable and individually scalable PSRmodular safety system is a flexible safety solution for monitoring your machine or system. The extension module is for extending the local bus in the PSRmodular system. Therefore, additional extension modules can be integrated into the system that are at a certain distance from the base station.

Your advantages

- Cost-effective safety solution with a high level of adaptability to individual requirements
- Fast startup, thanks to easy hardware and software configuration
- Machine downtimes minimized with comprehensive, easy-to-understand diagnostics
- Low housing width of just 22.6 mm
- Tool-free and time-saving installation thanks to Push-in technology

Commercial data

Item number	1105096
Packing unit	1 pc

Minimum order quantity	1 pc
Sales key	DN02
Product key	DNA362
GTIN	4055626975139
Weight per piece (including packing)	144 g
Weight per piece (excluding packing)	110 g
Customs tariff number	85371098
Country of origin	IT

Technical data

Notes

Note on application	Only for industrial use
Note on application	As things stand now, we are preparing the product so that, as of December 11, 2027, it will comply with the requirements of the EU Cyber Resilience Act (CRA) based on the information currently available regarding the CRA.

Product properties

Product type	Extension module
Application	Local bus extension
Special properties	The product is being prepared for compliance with the Cyber Resilience Act (CRA)

Insulation characteristics

Protection class	III

Insulation characteristics

Overvoltage category	II
Degree of pollution	2

Electrical properties

Maximum power dissipation for nominal condition	0.5 W
Nominal operating mode	100% operating factor
Interfaces	DIN rail TBUS for connection to the master module, supplied as standard
Rated surge voltage/insulation	Basic insulation 4 kV between all current paths and housing

Brake to be connected

Connection method	Push-in connection

Supply

Designation	A1/A2
Rated control circuit supply voltage U_S	19.2 V DC ... 28.8 V DC
Rated control circuit supply voltage U_S	24 V DC -20 % / +20 % (provide external protection, typically 1 A)
Rated control supply current I_S	typ. 21 mA (at U_S)
Power consumption at U_S	typ. 0.5 W
Inrush current	max. 8 A (Δt = 200 µs at U_s)
Filter time	typ. 20 ms (in the event of voltage dips at U_s)
Protective circuit	Serial protection against polarity reversal
	Varistor

Connection data

Connection method	Push-in connection
Stripping length	10 mm

Interfaces

Data: Local bus extension

Communication protocol	RS-485
Connection method	Terminal block
Number of connections	1
Note	Note the requirements for the transmission cable in accordance with the data sheet section “Wiring”.

Signaling

Status display	1 x LED (green)
Operating voltage display	1 x LED (green)
Error indication	2 x LED (red)

Dimensions

Width	22.61 mm
Height	107.74 mm
Depth	113.6 mm

Material specifications

Color (Housing)	yellow (RAL 1018)
Housing material	Polyamide PA non-reinforced

Environmental and real-life conditions

Ambient conditions

Degree of protection	IP20
Min. degree of protection of inst. location	IP54
Ambient temperature (operation)	-10 °C ... 55 °C (observe derating)
Ambient temperature (storage/transport)	-20 °C ... 85 °C
Maximum altitude	≤ 2000 m (Above sea level)
Max. permissible humidity (storage/transport)	95 % (non-condensing)
Max. permissible relative humidity (operation)	95 % (non-condensing)
Shock	10g for Δt = 16 ms (continuous shock, 1000 shocks in each space direction)
Vibration (operation)	10 Hz ... 150 Hz, 2g

Approvals

CE

Identification	CE-compliant

Mounting

Mounting type	DIN rail mounting
Mounting position	vertical or horizontal

Drawings

Application drawing

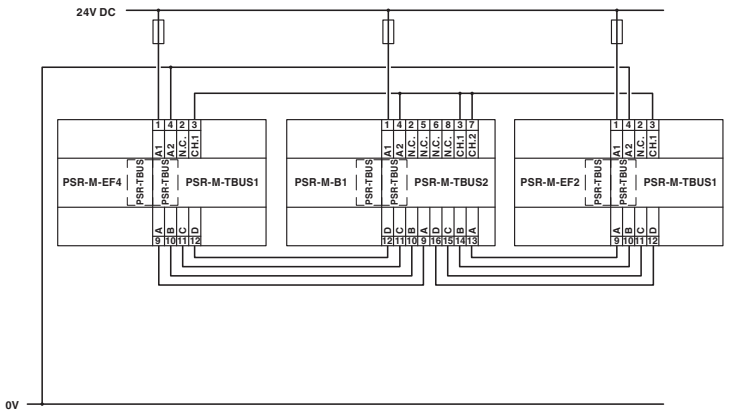

Block diagram

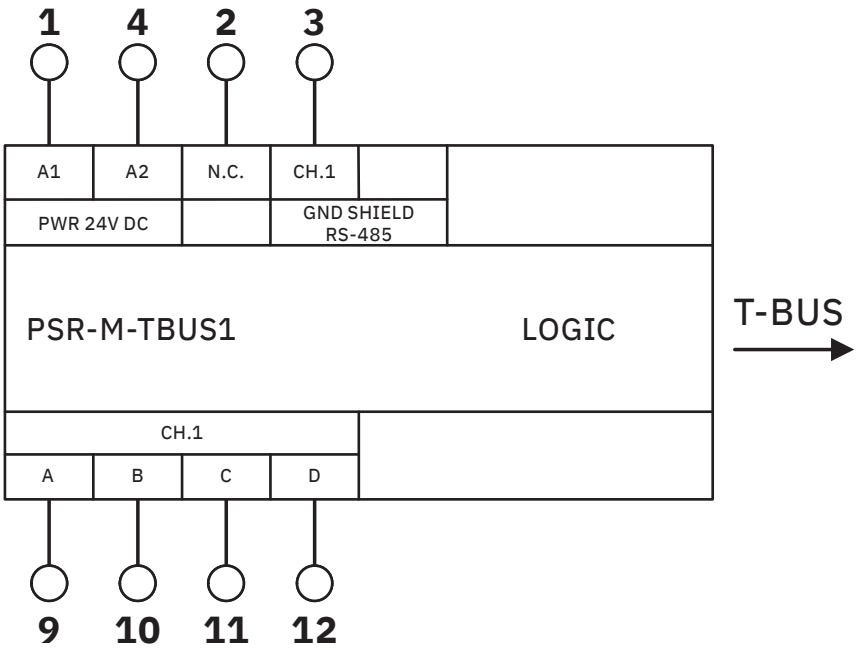

Block diagram

Approvals

To download certificates, visit the product detail page: https://www.phoenixcontact.com/us/products/1105096

cULus Listed
Approval ID: E238705

Functional Safety
Approval ID: Z10029429 0013Rev.02

Classifications

ECLASS

ECLASS-13.0	27371819
ECLASS-15.0	27371819

ETIM

ETIM 10.0	EC001449

UNSPSC

UNSPSC 21.0	39122200

Environmental product compliance

EU RoHS

Fulfills EU RoHS substance requirements	Yes, No exemptions

China RoHS

Environment friendly use period (EFUP)	EFUP-E
	No hazardous substances above the limits

EU REACH SVHC

REACH candidate substance (CAS No.)	No substance above 0.1 wt%

Phoenix Contact 2026 © - all rights reserved
https://www.phoenixcontact.com

Phoenix Contact USA
586 Fulling Mill Road
Middletown, PA 17057, United States
(+717) 944-1300
info@phoenixcon.com