PSR-M-EM4-SINCOS1-SC - Extension module

1105011

https://www.phoenixcontact.com/us/products/1105011

Please be informed that the data shown in this PDF document is generated from our online catalog. Please find the complete data in the user documentation. Our general terms of use for downloads are valid.

CRA-READY



Safe extension module for monitoring zero-speed, speed, direction of rotation, monitoring of 2 axes, NPN/PNP proximity switch, 1 x sin/cos encoder, TBUS interface, up to SIL 3, Cat. 4/PL e, pluggable screw terminal block, TBUS connector included

Product description

The configurable and individually scalable PSRmodular safety system is a flexible safety solution for monitoring your machine or system. The safe extension module is used to monitor downtimes, speed, and direction of rotation. The module is suitable for connection of NPN/PNP proximity switches and sine/cosine encoders.

Your advantages

- Cost-effective safety solution with a high level of adaptability to individual requirements
- Fast startup, thanks to easy hardware and software configuration
- Machine downtimes minimized with comprehensive, easy-to-understand diagnostics
- Low housing width of just 22.6 mm
- Up to Cat. 4/PL e in accordance with EN ISO 13849-1, SIL 3 in accordance with EN IEC 62061, SIL 3 in accordance with IEC 61508
- Suitable for elevator applications in accordance with EN 81-20

ELEKTROGERÄTE RÜCKNAHME

Commercial data

Item number	1105011

Packing unit	1 pc
Minimum order quantity	1 pc
Sales key	DN02
Product key	DNA363
GTIN	4055626973319
Weight per piece (including packing)	191.6 g
Weight per piece (excluding packing)	195.7 g
Customs tariff number	85371098
Country of origin	IT

Technical data

Notes

Note on application	Only for industrial use
Note on application	As things stand now, we are preparing the product so that, as of December 11, 2027, it will comply with the requirements of the EU Cyber Resilience Act (CRA) based on the information currently available regarding the CRA.

Product properties

Product type	Safety device
Application	Over-speed safety relay
	Zero-speed safety relay
	Monitoring the direction of rotation
Control	1 and 2 channel
Special properties	The product is being prepared for compliance with the Cyber Resilience Act (CRA)

Insulation characteristics

Protection class	III

Insulation characteristics

Overvoltage category	III
Degree of pollution	2

Times

Response time	see user manual
Restart time	min. 5 s (Boot time)
	max. 10 s (Boot time)

Electrical properties

Maximum power dissipation for nominal condition	2.86 W (U_B = 28,8 V, IN1 = IN2 = 50 mA)
Nominal operating mode	100% operating factor
Interfaces	DIN rail TBUS for connection to the master module, supplied as standard
	Encoder
	Proximity switches
Rated surge voltage/insulation	Basic insulation 4 kV between 24 V power supply and I/Os to the housing

Supply

Designation	A1/A2
Rated control circuit supply voltage U_S	19.2 V DC ... 28.8 V DC
Rated control circuit supply voltage U_S	24 V DC -20 % / +20 % (provide external protection, typically 1 A)
Rated control supply current I_S	typ. 55 mA
Power consumption at U_S	typ. 1.32 W

Inrush current	3.5 A (Δt = 1 ms at U_s)
Filter time	typ. 5 ms (at A1 in the event of voltage dips at U_s)
Protective circuit	Serial protection against polarity reversal
	Suppressor diode

Input data

Measurement

Input name	Proximity switch inputs
	IN1, IN2
Description of the input	NPN / PNP (3- or 4-wire)
Number of inputs	2
Input voltage range "0" signal	0 V DC ... 5 V DC (NPN)
	16 V DC ... 28.8 V DC (PNP)
Input voltage range "1" signal	16 V DC ... 28.8 V DC (NPN)
	0 V DC ... 5 V DC (PNP)
Input current range "0" signal	< 2 mA (NPN)
Precision	5 % (in reference to the parameterized limit value)
Limit frequency	max. 5 kHz
Duty factor	55 % ... 95 %
Pulse width	min. 20 µs
Max. permissible overall conductor resistance	150 Ω
Protective circuit	Suppressor diode
Current consumption	typ. 13 mA (NPN, at U_S)
	typ. -13 mA (PNP, at U_s)
	max. 17 mA (NPN, at 28.8 V DC)
	max. -15 mA (PNP, at 28.8 V DC)

Measurement

Input name	Encoder input
Description of the input	Sin/Cos
	Diagnostic function: $\sin^2(x) + \cos^2(x) = 1$
Number of inputs	1
Input impedance	120 Ω (per trace)
Precision	5 % (in reference to the parameterized limit value)
Limit frequency	max. 500 kHz
Sine / cosine Signal form/signal level	0.8 V_{PP} ... 1.2 V_{PP} (Offset: 2.5 V ±20%, phase shift trace A, B: 90° ±30°)
Current consumption	typ. 8 mA (Per track for U_S)

Output data

Digital: Proximity switch supply (24V/0V)

Short-circuit protection	no
Nominal output voltage range	16.7 V DC ... 26.3 V DC (U_S - 2,5 V)

Connection data

Connection technology

pluggable	yes

Conductor connection

Connection method	Screw connection
Conductor cross-section rigid	0.2 mm² ... 2.5 mm²
Conductor cross-section flexible	0.2 mm² ... 2.5 mm²
Conductor cross-section AWG	24 ... 12
Stripping length	7 mm
Screw thread	M3
Tightening torque	0.5 Nm ... 0.6 Nm

Signaling

Status display	5 x LED (yellow), 1 x LED (green), 2 x LED (orange)
Operating voltage display	1 x LED (green)
Error indication	2 x LED (red)

Dimensions

Width	22.61 mm
Height	112.58 mm
Depth	113.6 mm

Material specifications

Color (Housing)	yellow (RAL 1018)
Housing material	Polyamide PA non-reinforced

Characteristics

Safety data: EN ISO 13849

Performance level (PL)	e

Safety data: IEC 61508 - High demand

Safety Integrity Level (SIL)	3

Safety data: EN IEC 62061

Safety Integrity Level (SIL)	3

Environmental and real-life conditions

Ambient conditions

Degree of protection	IP20
Min. degree of protection of inst. location	IP54
Ambient temperature (operation)	-10 °C ... 55 °C (observe derating)
Ambient temperature (storage/transport)	-20 °C ... 85 °C
Maximum altitude	≤ 2000 m (Above sea level)

Max. permissible humidity (storage/transport)	95 % (non-condensing)
Max. permissible relative humidity (operation)	95 % (non-condensing)
Shock	10g for Δt = 16 ms (continuous shock, 1000 shocks in each space direction)
Vibration (operation)	10 Hz ... 150 Hz, 2g

Approvals

CE

Identification	CE-compliant

Mounting

Mounting type	DIN rail mounting
Assembly note	Observe derating
Mounting position	vertical or horizontal

Drawings

Application drawing

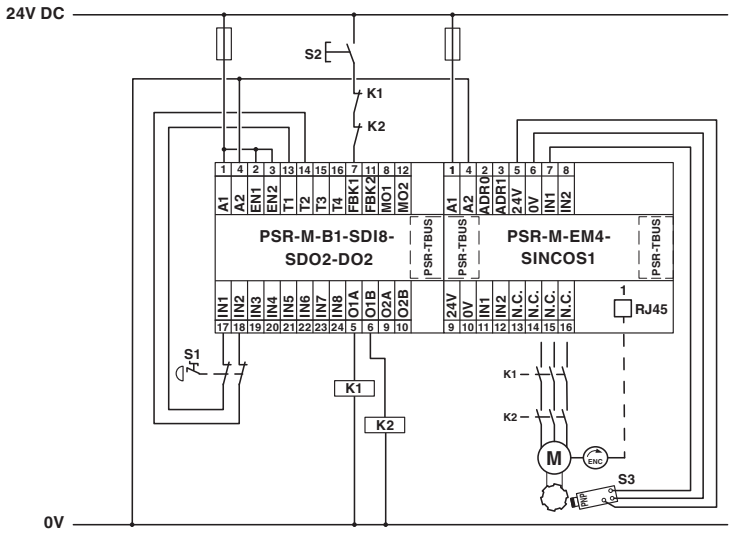

Example application

Block diagram

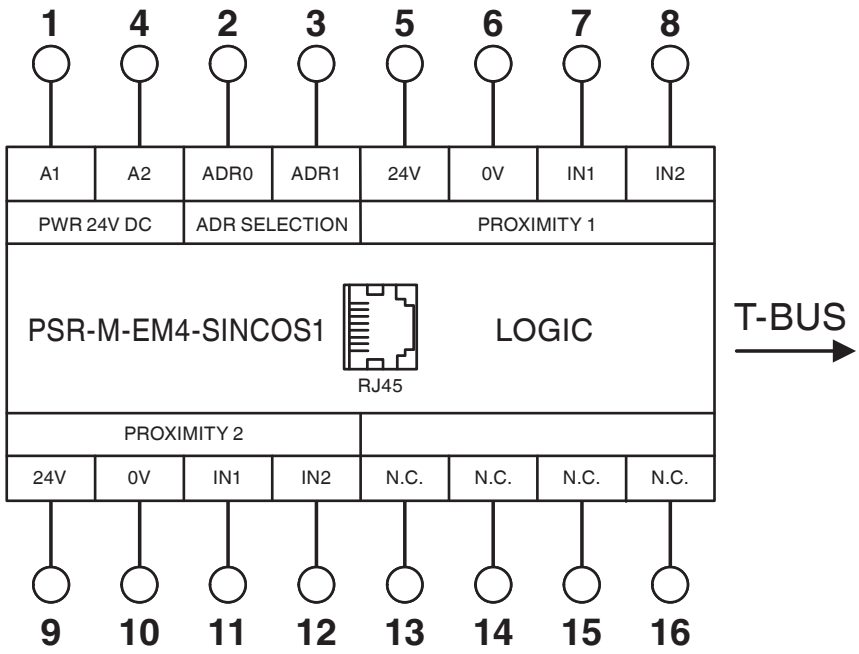

Block diagram

Approvals

To download certificates, visit the product detail page: https://www.phoenixcontact.com/us/products/1105011

cULus Listed
Approval ID: E238705

Functional Safety
Approval ID: Z10029429 0013Rev.02

Classifications

ECLASS

ECLASS-13.0	27371819
ECLASS-15.0	27371819
ECLASS-15.0 ASSET	27250101

ETIM

ETIM 10.0	EC001449

UNSPSC

UNSPSC 21.0	39122200

Environmental product compliance

EU RoHS

Fulfills EU RoHS substance requirements	Yes, No exemptions

China RoHS

Environment friendly use period (EFUP)	EFUP-E
	No hazardous substances above the limits

EU REACH SVHC

REACH candidate substance (CAS No.)	No substance above 0.1 wt%

EF3.1 Climate Change

CO2e kg	47.806 kg CO2e

Phoenix Contact 2026 © - all rights reserved
https://www.phoenixcontact.com

Phoenix Contact USA
586 Fulling Mill Road
Middletown, PA 17057, United States
(+717) 944-1300
info@phoenixcon.com