FOC-FDX20-PP-SCD6-MM E05 - Splice box

1099959

https://www.phoenixcontact.com/us/products/1099959

Please be informed that the data shown in this PDF document is generated from our online catalog. Please find the complete data in the user documentation. Our general terms of use for downloads are valid.



DIN rail splice box including 6x SC duplex couplings

Splice box, Rail-mountable module, Ethernet, connection method: Splicing, material: Metal, degree of protection: IP20, color: gray

Product description

DIN rail splice box of the FDX 20 series, equipped with 6x SC duplex couplings, splice holder (for separately sold shrink und crimp splice protection) on a patented splice comb made from powder-coated sheet steel. Cable insertion possible via cable gland either at top or bottom. Housing (2-part) prepared for DIN rail mounting through rear-side adapter (this can also be mounted on the side).

Scope of supply:
DIN rail housing with integrated splice comb (mounted), equipped with 6x SC duplex couplings, 1x splice holder, 1x cable gland (M20x1.5)

Your advantages

- Intuitive front-panel operation and clear control cabinet layout thanks to uniform design
- Flexible DIN rail mounting possible in six positioning directions
- Suitable for industrial applications
- Continuously reliable data connection, thanks to extensively tested components
- Snap-on mounting on standard DIN rails NS 35/7.5 or NS 35/15
- Perfectly sized and patented pigtail tray for convenient splicing and compact bending radii.
- For easy field connection

Commercial data

Item number	1099959
Packing unit	1 pc
Minimum order quantity	1 pc
Product key	ABNGAB
GTIN	4055626951300
Weight per piece (including packing)	22.22 g
Weight per piece (excluding packing)	454.921 g
Country of origin	Information on the country of origin is provided with the delivery.

Technical data

Notes

Order information:	In addition, shrink splice protection (Item No.: 1019676) or crimp splice protection (Item No.: 1019678) must be ordered separately.
Order information:	Wire pigtails must be ordered separately

Product properties

Product type	Network distributor box
Series	FDX 20 series
Type	Rail-mountable module
Connection profile	SC-Duplex
No. of cable outlets	2
No. of conductors	12
Number of module slots	6
Number of slots	12
Type of the screw connection	M20 x 1.5
Protective cover	yes
Cable outlet	above and below

Electrical properties

Transmission medium	FO

Connection data

Connection technology

Connection method	Splicing

Interfaces

Signal type/category	Ethernet

Dimensions

Dimensional drawing	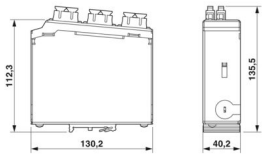
Height	130 mm
Depth	115 mm

Housing

Housing width	40 mm

Mechanical characteristics

Ferrule diameter	2.5 mm

Material specifications

Color	gray
Flammability rating according to UL 94	V0
Ferrule material	Zirconia ceramics
Housing material	Metal
Housing surface material	Powder-coated, gray

Cable/line

Cable type	Fiberglass
External cable diameter	6 mm

FO cable

Number of fibers	12
Fiber	GOF
Fiber type	Multi-mode fiberglass
Transmission medium	FO

Mechanical properties

Mechanical data

Type of the screw connection	M20 x 1.5
Insertion/withdrawal cycles	≥ 500

Environmental and real-life conditions

Ambient conditions

Degree of protection	IP20 (according to IEC 60529)
	IP20
Ambient temperature (operation)	-40 °C ... 85 °C
Ambient temperature (assembly)	0 °C ... 50 °C
Resistance to UV radiation	yes

Mounting

Mounting type	DIN rail mounting

Drawings

Dimensional drawing

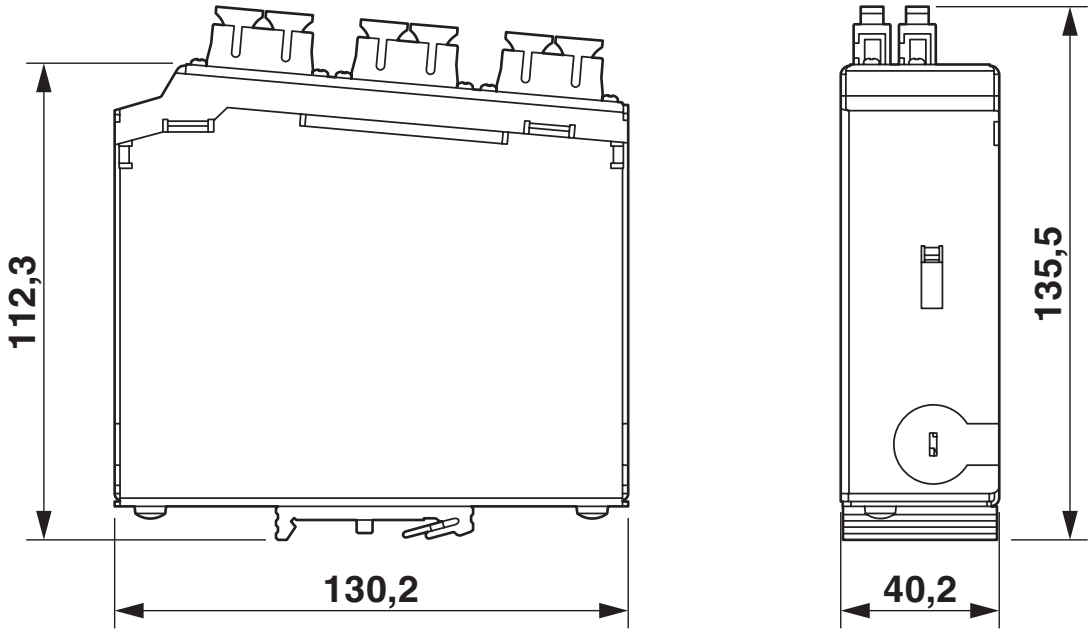

DIN rail distributor 6x SC duplex

Classifications

ECLASS

ECLASS-13.0	19170113

ETIM

ETIM 9.0	EC001130

Environmental product compliance

EU RoHS

Fulfills EU RoHS substance requirements	Yes, No exemptions

China RoHS

Environment friendly use period (EFUP)	EFUP-E
	No hazardous substances above the limits

EU REACH SVHC

REACH candidate substance (CAS No.)	No substance above 0.1 wt%

Phoenix Contact 2026 © - all rights reserved
https://www.phoenixcontact.com

Phoenix Contact USA
586 Fulling Mill Road
Middletown, PA 17057, United States
(+717) 944-1300
info@phoenixcon.com