SAC-3P-20,0-680/M8FR FDP - Sensor/actuator cable

1096046

https://www.phoenixcontact.com/us/products/1096046

Please be informed that the data shown in this PDF document is generated from our online catalog. Please find the complete data in the user documentation. Our general terms of use for downloads are valid.



Sensor/actuator cable, 3-position, PVC, gray, shielded, free cable end, on Socket angled M8, coding: A, cable length: 20 m, Foil shielding and drain wire connected to pin 4

Commercial data

Item number	1096046
Packing unit	1 pc
Minimum order quantity	1 pc
Note	Made to order (non-returnable)
Sales key	BF13
Product key	AF1IEE
GTIN	4055626929972
Weight per piece (including packing)	22.22 g
Weight per piece (excluding packing)	22.22 g
Country of origin	US

Technical data

Product properties

Product type	Sensor/actuator cable
Application	Standard, U.S. cables
Number of positions	3
No. of cable outlets	1
Shielded	yes
Coding	A

Insulation characteristics

Overvoltage category	II
Degree of pollution	3

Material specifications

Flammability rating according to UL 94	HB
Seal material	NBR
Material of grip body	TPU, hardly inflammable, self-extinguishing
Contact material	CuSn
Contact surface material	Ni/Au
Contact carrier material	TPU GF
Material for screw connection	Zinc die-cast, nickel-plated

Electrical properties

Insulation resistance	≥ 100 MΩ
Nominal voltage U_N	48 V AC
	60 V DC
Nominal current I_N	4 A

Mechanical properties

Mechanical data

Insertion/withdrawal cycles	≥ 100

Signaling

Status display	no
Status display present	no

Connection data

Conductor connection

Tightening torque	0.2 Nm (M8 connectors)

Connector

Connection 1

Type	free cable end

Connection 2

Type	Socket angled M8
Number of positions	3
Coding type	A

Cable/line

Cable length	20 m
Dimensional drawing	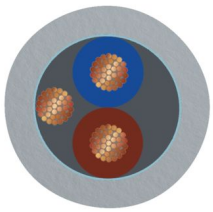
Cable weight	22.17 kg/km
UL AWM Style	2517 (105 °C / 300 V)
Number of positions	2
Shielded	yes
AWG signal line	24
Wire diameter incl. insulation	1.12 mm ±0.03 mm
External cable diameter	3.99 mm ±0.2 mm
Outer sheath, material	PVC
External sheath, color	gray
Conductor material	Tin-plated Cu litz wires
Material wire insulation	PVC (Signal line)
Single wire, color	brown, blue
Type of pair shielding	Plastic-coated aluminum foil, aluminum side inside
Overall twist	Conductors, fillers, and drain wire are twisted with left-hand lay
Max. conductor resistance	max. 80.2 Ω/km (20 °C)
Insulation resistance	≥ (550 M Ohms/m @ 500V)
Nominal voltage, cable	300 V
Minimum bending radius, flexible installation	8 x D
Smallest bending radius, movable installation	32 mm
Flame resistance	FT4
Other resistance	UV resistant
Ambient temperature (operation)	-30 °C ... 105 °C (cable, fixed installation)

Environmental and real-life conditions

Ambient conditions

Degree of protection	IP65
	IP67

	IP68
Ambient temperature (operation) (male connector/female connector)	-25 °C ... 90 °C (Plug / socket)
Ambient temperature (operation) (Cable, fixed installation)	-40 °C ... 80 °C (cable, fixed installation)
Ambient temperature (operation) (Cable, flexible installation)	-5 °C ... 80 °C (Cable, flexible installation)

Standards and regulations

Standard designation	M8 connector
Standards/specifications	IEC 61076-2-104

Drawings

Dimensional drawing

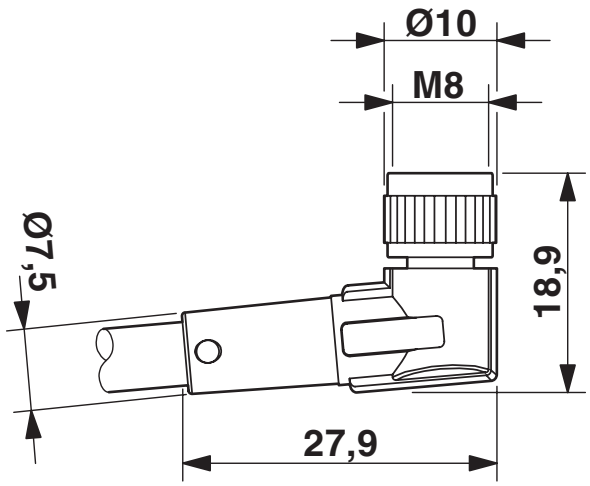

Socket M8 x 1, angled

Schematic diagram

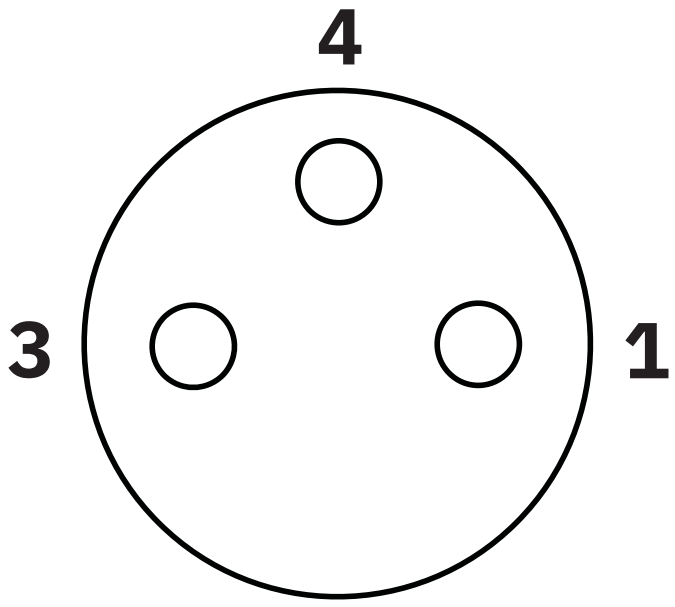

Pin assignment M8 socket, 3-pos., view female side

Circuit diagram

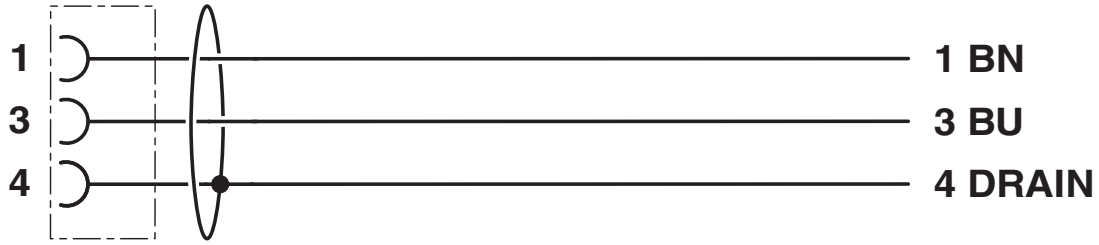

Contact assignment of M8 plugs/sockets

Classifications

ECLASS

ECLASS-13.0	27060311
ECLASS-15.0	27060311

ETIM

ETIM 10.0	EC001855

UNSPSC

UNSPSC 21.0	31251501

Environmental product compliance

EU RoHS

Fulfills EU RoHS substance requirements	Yes, No exemptions

China RoHS

Environment friendly use period (EFUP)	EFUP-E
	No hazardous substances above the limits

EU REACH SVHC

REACH candidate substance (CAS No.)	No substance above 0.1 wt%

Phoenix Contact 2026 © - all rights reserved
https://www.phoenixcontact.com

Phoenix Contact USA
586 Fulling Mill Road
Middletown, PA 17057, United States
(+717) 944-1300
info@phoenixcon.com