TTC-6-3-HF-F-24AC-PT-I - Surge protection device

1088786

https://www.phoenixcontact.com/us/products/1088786

Please be informed that the data shown in this PDF document is generated from our online catalog. Please find the complete data in the user documentation. Our general terms of use for downloads are valid.





Surge protection with integrated status indicator for three signal wires with common reference potential. For HF applications and telecommunications interfaces without supply voltage (up to 90 Mbps). Indirect grounding via gas discharge tube.

Your advantages

- Space-saving and cost-saving with a narrow overall width of just 6 mm
- Continuous monitoring of protective devices, plus mechanical status indicator with optional remote signaling
- Finding the right product for all possible requirements in MCR applications is easy, thanks to the complete range of products with customized features

ELEKTROGERÄTE RÜCKNAHME

Commercial data

Item number	1088786
Packing unit	1 pc
Minimum order quantity	1 pc
Sales key	CL23
Product key	CL2262
GTIN	4055626891712
Weight per piece (including packing)	38.5 g

Weight per piece (excluding packing)	37 g
Customs tariff number	85363010
Country of origin	DE

Technical data

Product properties

Product type	Surge protection for information technology
Product family	TERMITRAB complete
IEC test classification	C1
	C2
	C3
	D1
Type	DIN rail module, one-piece

Insulation characteristics

Overvoltage category	III
Pollution degree	2

Electrical properties

Nominal voltage U_N	24 V AC

Connection data

Connection method	Push-in connection
Conductor cross-section flexible	0.2 mm² ... 2.5 mm²
Conductor cross-section rigid	0.2 mm² ... 4 mm²
Conductor cross-section AWG	24 ... 12

Dimensions

Dimensional drawing	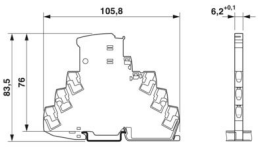
Width	6.2 mm +0.1 mm
Height	105.8 mm
Depth	83.5 mm (incl. DIN rail 7.5 mm)

Material specifications

Color	gray (RAL 7042)
Flammability rating according to UL 94	V-0
Insulating material	PBT
Housing material	PBT

Mechanical properties

Mechanical data

Open side panel	No

Protective circuit

Direction of action	Line-Line & Line-Signal Ground/Shield & optional Signal Ground/Shield-Earth Ground
Nominal voltage U_N	24 V AC
Maximum continuous operating voltage U_C	43 V DC
	30 V AC
Rated current	600 mA (40 °C)
Protective conductor current I_{PE}	≤ 1 µA
Nominal discharge current I_n (8/20) µs	10 kA
Pulse discharge current I_{imp} (10/350) µs	2.5 kA
Total discharge current I_{Total} (8/20) µs	10 kA
Voltage protection level U_p (line-line)	≤ 80 V (C1 - 1 kV / 500 A)
	≤ 80 V (C1 - 1 kV / 500 A, >1 µs)
	≤ 150 V (C2 - 10 kV / 5 kA)
	≤ 70 V (C2 - 10 kV / 5 kA, >1 µs)
	≤ 75 V (C3 - 100 A)
	≤ 75 V (C3 - 100 A, >1 µs)
Voltage protection level U_p (line-earth)	≤ 900 V (C1 - 1 kV / 500 A)
	≤ 100 V (C1 - 1 kV / 500 A, >1 µs)
	≤ 1 kV (C2 - 10 kV / 5 kA)
	≤ 70 V (C2 - 10 kV / 5 kA, >1 µs)
	≤ 1200 V (C3 - 100 A)
	≤ 70 V (C3 - 100 A, >1 µs)
Response time t_A (line-line)	≤ 1 ms
Response time t_A (line-earth)	≤ 55 ms
Input attenuation aE, sym.	typ. 0.3 dB (≤ 10 MHz/150 Ω)
Cut-off frequency fg (3 dB), sym. in 150 Ω system	typ. 60 MHz
Capacity (Core-Core)	typ. 25 pF
Capacity (Core-Earth)	typ. 50 pF
Resistance per path	1.65 Ω ±20 %
Surge protection fault message	optical
Max. required back-up fuse	630 mA (FF)
Impulse durability (line-line)	C1 - 1 kV / 500 A
	C2 - 10 kV / 5 kA
	C2 - 10 kA
	C3 - 100 A
Impulse durability (line-earth)	C1 - 1 kV / 500 A
	C2 - 10 kV / 5 kA
	C2 - 10 kA
	C3 - 100 A
	D1 - 2.5 kA

Environmental and real-life conditions

Ambient conditions

Degree of protection	IP20
Ambient temperature (operation)	-40 °C ... 85 °C
Ambient temperature (storage/transport)	-40 °C ... 85 °C
Altitude	≤ 4000 m (amsl)
Permissible humidity (operation)	5 % ... 95 % (non-condensing)

Standards and regulations

Standards/specifications	IEC 61643-21
Note	2000 + A1:2008 + A2:2012

EN 61643-21

Standards/specifications	EN 61643-21
Note	2001 + A1:2009 + A2:2013

Mounting

Mounting type	DIN rail: TH 35 - 7.5 mm

Drawings

Dimensional drawing

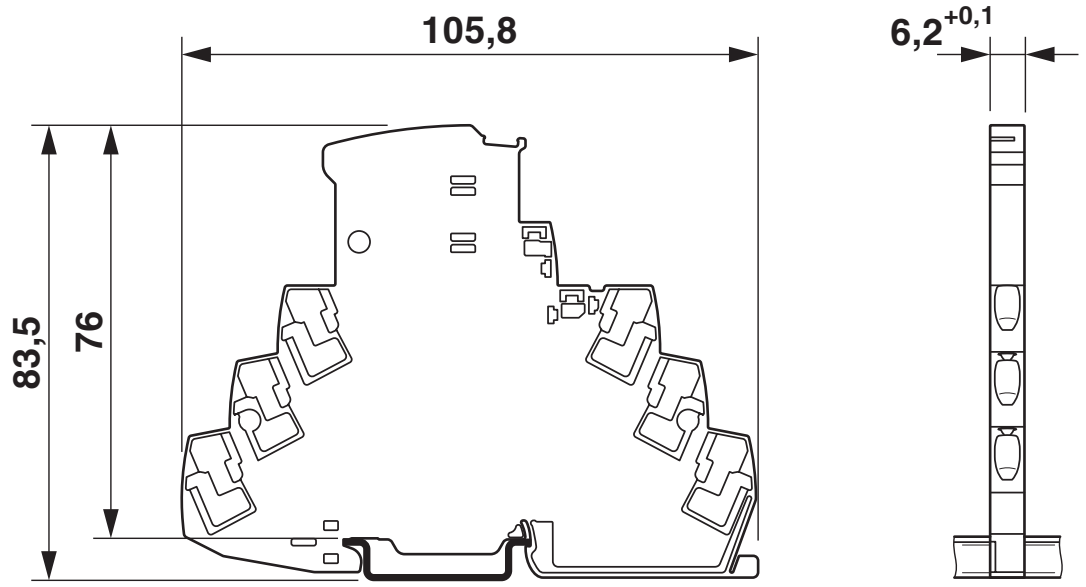

Diagram

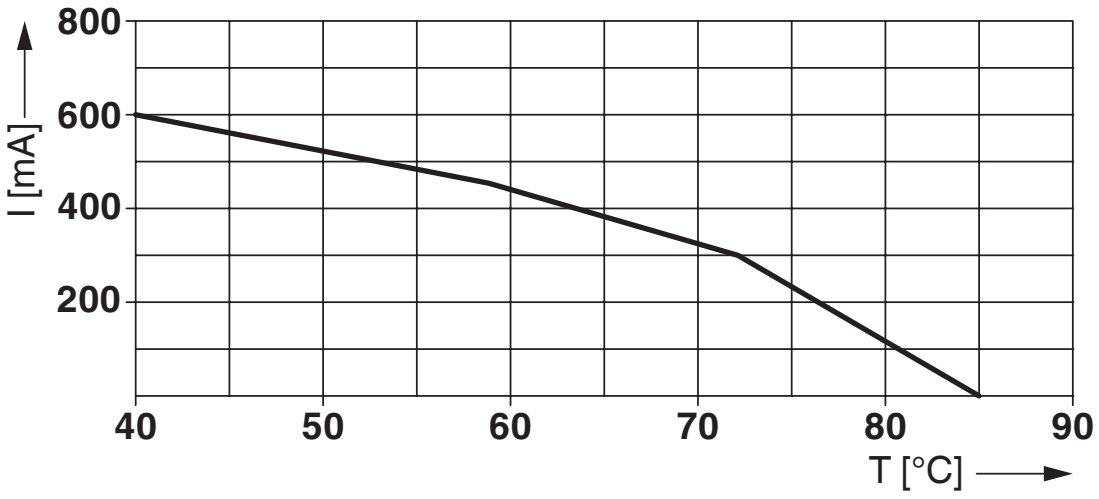

Circuit diagram

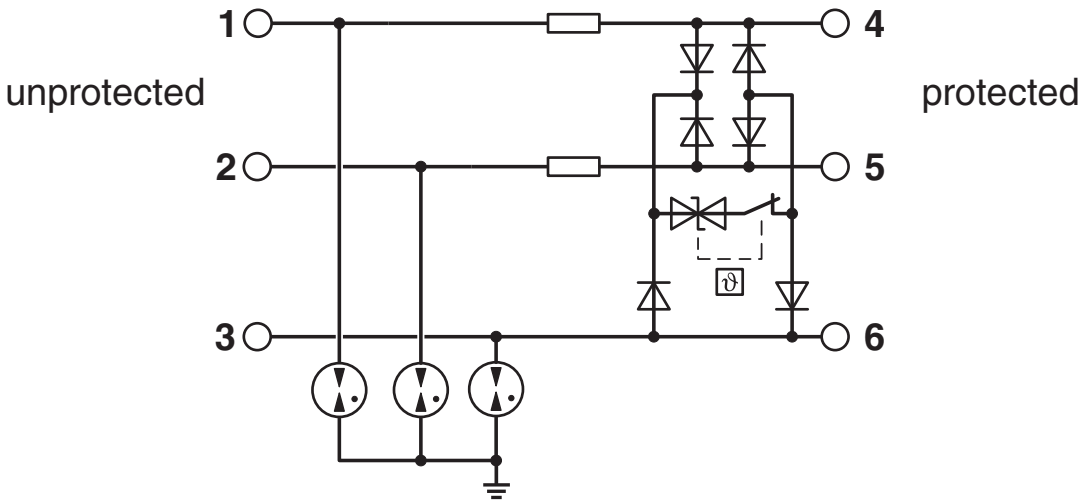

Approvals

To download certificates, visit the product detail page: https://www.phoenixcontact.com/us/products/1088786

UAE-RoHS
Approval ID: 22-06-16191

UL Listed
Approval ID: FILE E 138168

Classifications

ECLASS

ECLASS-13.0	27171503
ECLASS-15.0	27171503

ETIM

ETIM 10.0	EC001466

UNSPSC

UNSPSC 21.0	39121600

Environmental product compliance

EU RoHS

Fulfills EU RoHS substance requirements	Yes
Exemption	7(a), 7(c)-I

China RoHS

Environment friendly use period (EFUP)	EFUP-50
	An article-related China RoHS declaration table can be found in the download area for the respective article under "Manufacturer declaration". For all articles with EFUP-E, no China RoHS declaration table issued and required.

EU REACH SVHC

REACH candidate substance (CAS No.)	Lead(CAS: 7439-92-1)
SCIP	1038112a-79db-461e-bf6a-5ea278c79e20

EF3.1 Climate Change

CO2e kg	1.47 kg CO2e

Phoenix Contact 2026 © - all rights reserved
https://www.phoenixcontact.com

Phoenix Contact USA
586 Fulling Mill Road
Middletown, PA 17057, United States
(+717) 944-1300
info@phoenixcon.com