IPD W 5P2,5 F 0,5 M25 GY - Panel feed-through

1088705

https://www.phoenixcontact.com/us/products/1088705

Please be informed that the data shown in this PDF document is generated from our online catalog. Please find the complete data in the user documentation. Our general terms of use for downloads are valid.



Panel feed-through, for connectors, connection method: Single wires, number of positions: 4+PE, M25, Socket, 450 V, 17.5 A, gray, coding: P, 2.5 mm^2, cable length: 0.5 m

Your advantages

- Easy distribution of power, as components are plugged directly
- Simple, time-saving wiring in the field with Push-Lock connection
- Reliable installation in harsh environments with IP66, IP68, and IP69K throughout the entire system
- Secure, tool-free locking even in particularly difficult installation situations
- Fast commissioning with preassembled cable assemblies

Commercial data

Item number	1088705
Packing unit	1 pc
Minimum order quantity	1 pc
Sales key	BF51
Product key	AF6LCB
GTIN	4055626891194
Weight per piece (including packing)	124 g
Weight per piece (excluding packing)	120 g
Customs tariff number	85444290
Country of origin	CN

Technical data

Notes

General	NOTE: Observe the permissible bending radii when routing cables, since the degree of protection may be at risk if the bending forces are too high. Reduce mechanical loads upstream of the connector, e.g., by using cable ties.

Product properties

Product type	Panel feed-through
Product family	IPD
Number of positions	5
Connection profile	4+PE
Position marking	1, 2, 3, N, PE
Coding	P

Insulation characteristics

Overvoltage category	III
Degree of pollution	3

Connection data

Connection technology

Connection method On the device side	Single wires

Dimensions

Dimensional drawing	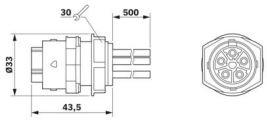
Width	33 mm
Height	33 mm
Length	43.4 mm

Electrical properties

Rated surge voltage (III/3)	6 kV
Rated current	17.5 A
Rated voltage (III/3)	450 V
Nominal voltage U_N	450 V AC
	450 V DC
Nominal current I_N	17.5 A

Mechanical properties

Mechanical data

Insertion/withdrawal cycles	50 (IP66/IP68/IP69K)
	100 (IP66)

Material specifications

Color	light gray (RAL 7035)
Material Housing	PA
Material Seal	EPDM
Contact material	Cu
Contact surface material	Ni/Ag/Sn

Cable/line

Cable length	0.5 m
Structure of individual litz in acc. with VDE 0295 / smallest wire diameter	VDE 0295 class 5
Position marking	1, 2, 3, N, PE
Single wire, color	blue, brown, black, gray, green/yellow
Cable cross section	2.5 mm²
Material wire insulation	PVC
Halogen-free	no

Mounting

Mounting type	Front mounting M25

Environmental and real-life conditions

Ambient conditions

Degree of protection	IP66
	IP68 (2 m / 24 h)
	IP69K
	Touch-proof when not plugged in (IP2X)
Impact strength	IK07
Ambient temperature (operation)	-30 °C ... 90 °C
Temperature when conductor connected	-5 °C ... 50 °C
Ambient temperature (storage/transport)	-30 °C ... 90 °C
Resistance to UV radiation	yes

Drawings

Dimensional drawing

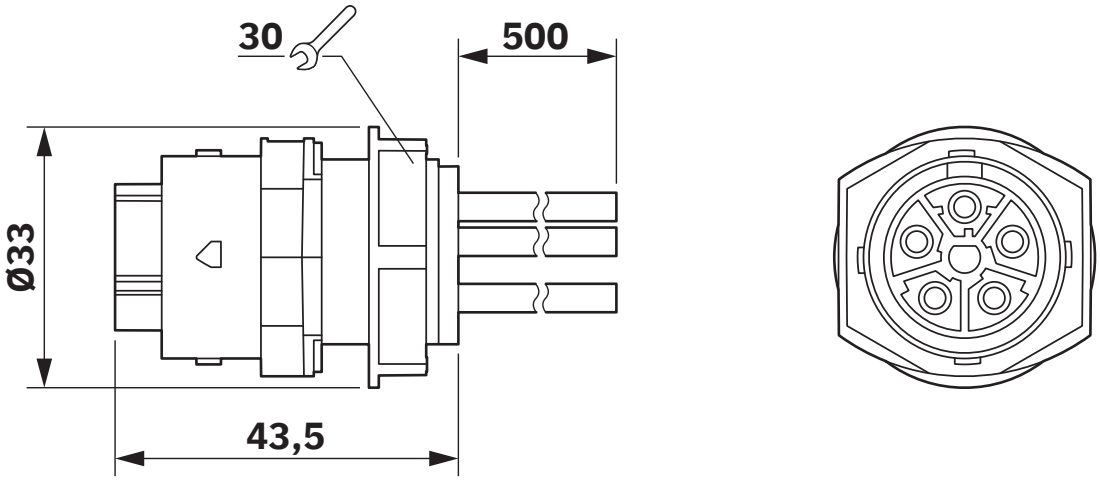

Diagram

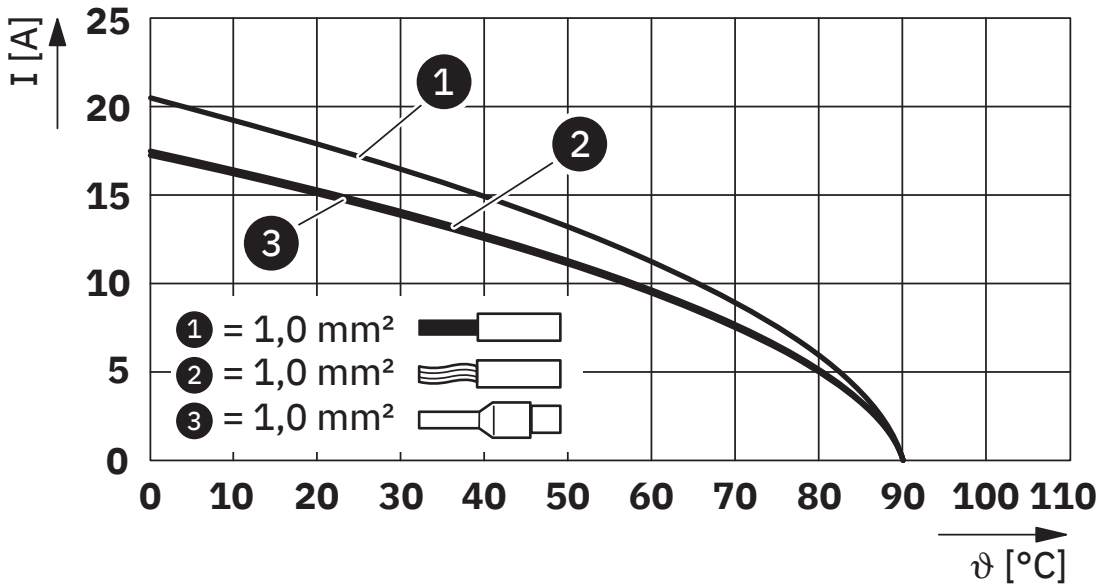

Derating diagram for 1.0 mm^2

Diagram

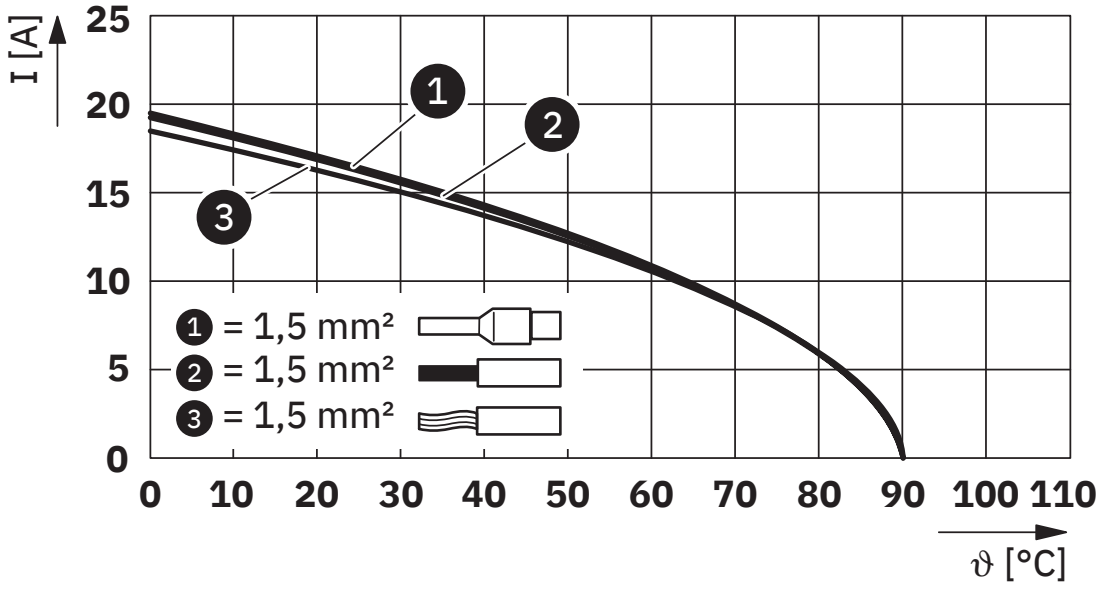

Derating diagram for 1.5 mm^2

Diagram

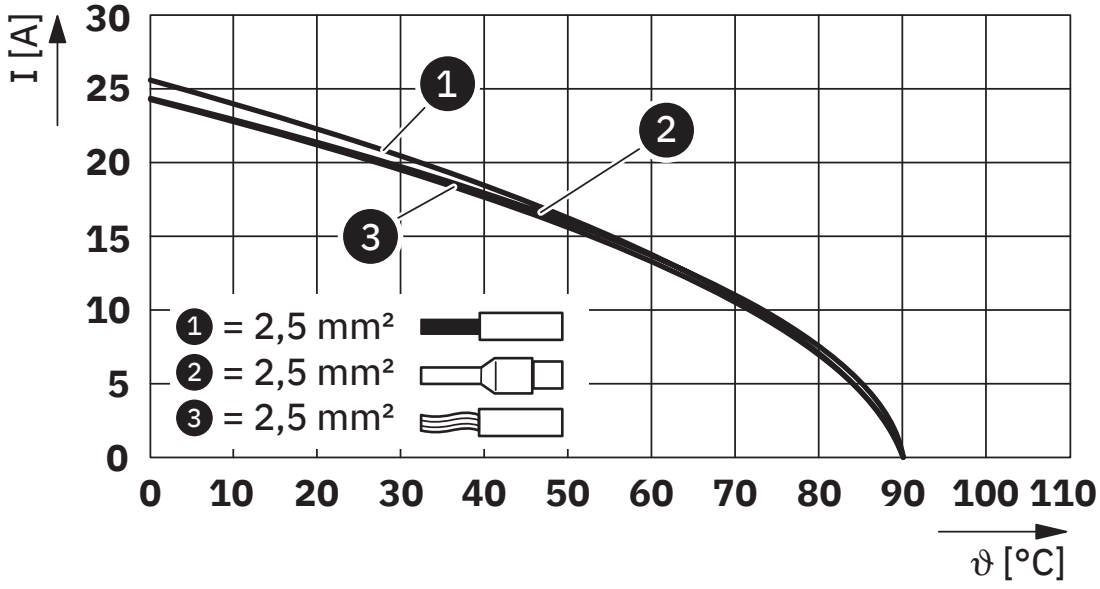

Derating diagram for 2.5 mm^2

Approvals

To download certificates, visit the product detail page: https://www.phoenixcontact.com/us/products/1088705

VDE Zeichengenehmigung
Approval ID: 40059408

cULus Listed
Approval ID: E468743

	Nominal voltage U_N	Nominal current I_N	Cross section AWG	Cross section mm^2
keine				
Only flexible conductors	600 V	20 A	- 14	-
Only rigid conductors	600 V	20 A	- 14	-
multi-stranded with ferrule	600 V	20 A	- 14	-

Classifications

ECLASS

ECLASS-13.0	27440602
ECLASS-15.0	27440602

ETIM

ETIM 10.0	EC002566

UNSPSC

UNSPSC 21.0	39121500

Environmental product compliance

EU RoHS

Fulfills EU RoHS substance requirements	Yes, No exemptions

China RoHS

Environment friendly use period (EFUP)	EFUP-E
	No hazardous substances above the limits

EU REACH SVHC

REACH candidate substance (CAS No.)	No substance above 0.1 wt%

Phoenix Contact 2026 © - all rights reserved
https://www.phoenixcontact.com

Phoenix Contact USA
586 Fulling Mill Road
Middletown, PA 17057, United States
(+717) 944-1300
info@phoenixcon.com