# IPD W 3P2,5 M M20 GY - Panel feed-through

1088687

https://www.phoenixcontact.com/us/products/1088687

Please be informed that the data shown in this PDF document is generated from our online catalog. Please find the complete data in the user documentation. Our general terms of use for downloads are valid.



Panel feed-through, for connectors, connection method: Push-in connection, number of positions: 2+PE, M20, Pin, 0.5 $mm^2$ ... 2.5 $mm^2$, 500 V, 20 A, light gray, coding: P

## Your advantages

- Easy distribution of power, as components are plugged directly
- Simple, time-saving wiring in the field with Push-Lock connection
- Reliable installation in harsh environments with IP66, IP68, and IP69K throughout the entire system
- Secure, tool-free locking even in particularly difficult installation situations
- Fast commissioning with preassembled cable assemblies

## Commercial data

| | |
|---|---|
| Item number | 1088687 |
| Packing unit | 1 pc |
| Minimum order quantity | 1 pc |
| Sales key | BF51 |
| Product key | AF6LAA |
| GTIN | 4055626891026 |
| Weight per piece (including packing) | 30.54 g |
| Weight per piece (excluding packing) | 30.5 g |
| Customs tariff number | 85366990 |
| Country of origin | CN |

## Technical data

### Product properties

| | |
|---|---|
| Product type | Panel feed-through |
| Product family | IPD |
| Number of positions | 3 |
| Connection profile | 2+PE |
| Position marking | L, N, PE |
| Number of connections per position | 1 |
| Coding | P |

Insulation characteristics

| | |
|---|---|
| Overvoltage category | III |
| Degree of pollution | 3 |

### Connection data

Connection technology

| | |
|---|---|
| Connection method On the device side | Push-in connection |

Conductor connection

| | |
|---|---|
| Conductor cross-section flexibel | 0.5 mm² ... 2.5 mm² |
| Conductor cross-section solid | 0.5 mm² ... 2.5 mm² |
| Conductor cross-section with ferrule | 0.5 mm² ... 2.5 mm² |
| Connection cross section AWG | 20 ... 14 |

### Dimensions

| | |
|---|---|
| Dimensional drawing | 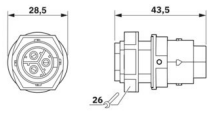  |
| Width | 28.5 mm |
| Height | 28.5 mm |
| Length | 43.5 mm |
| Hole diameter | 20 mm ... 20.2 mm |

### Electrical properties

| | |
|---|---|
| Rated surge voltage (III/3) | 6 kV |
| Rated current | 20 A |
| Rated voltage (III/3) | 500 V |
| Nominal voltage $U_N$ | 500 V AC |
| | 500 V DC |
| Nominal current $I_N$ | 20 A |

## Mechanical properties

Mechanical data

| | |
|---|---|
| Insertion/withdrawal cycles | 50 (IP66/IP68/IP69K) |
| | 100 (IP66) |

## Material specifications

| | |
|---|---|
| Color (Housing) | light gray (RAL 7035) |
| Material Housing | PA |
| Material Seal | EPDM |
| Flammability rating according to UL 94 | V0 |
| Contact material | Cu |
| Contact surface material | Ni/Ag/Sn |

## Cable/line

| | |
|---|---|
| Position marking | L, N, PE |

## Mounting

| | |
|---|---|
| Mounting type | M20 |

## Environmental and real-life conditions

Ambient conditions

| | |
|---|---|
| Degree of protection | IP66 |
| | IP68 (2 m / 24 h) |
| | IP69K |
| | Touch-proof when not plugged in (IP2X) |
| Impact strength | IK07 |
| Ambient temperature (operation) | -30 °C ... 100 °C |
| Temperature when conductor connected | -5 °C ... 50 °C |
| Ambient temperature (storage/transport) | -30 °C ... 100 °C |
| Resistance to UV radiation | yes |

## Drawings

Dimensional drawing

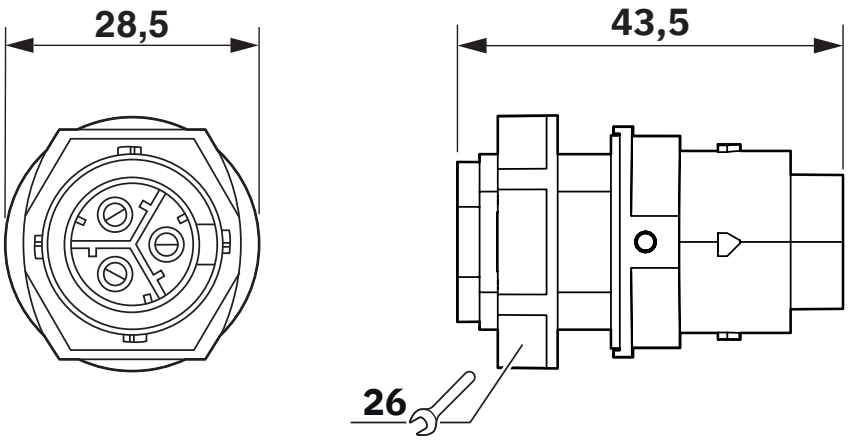


Diagram

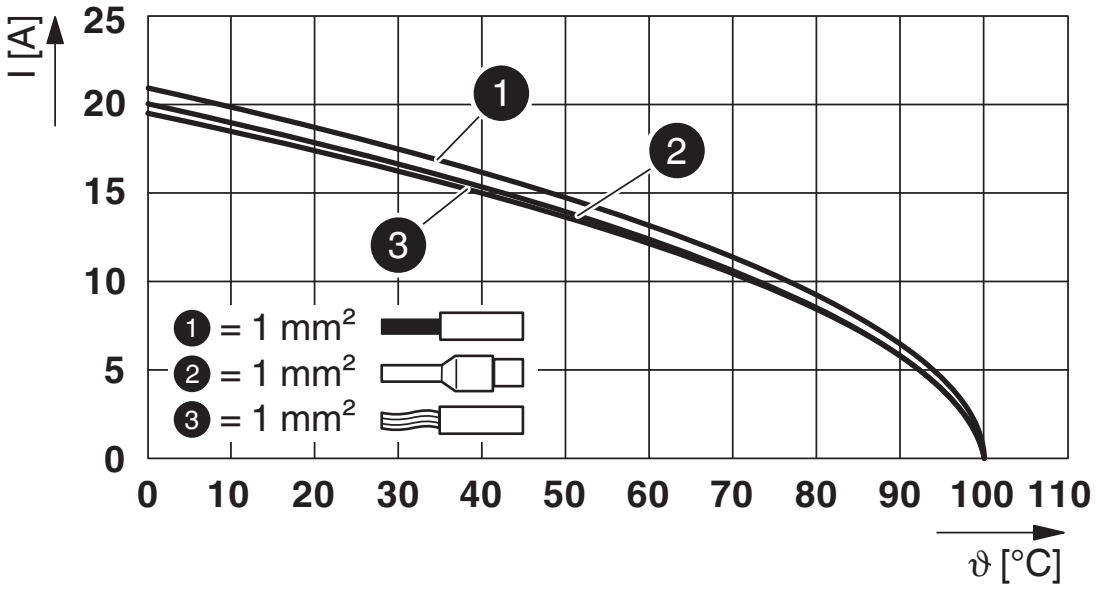


Derating diagram for 1.0 mm$^2$

Diagram

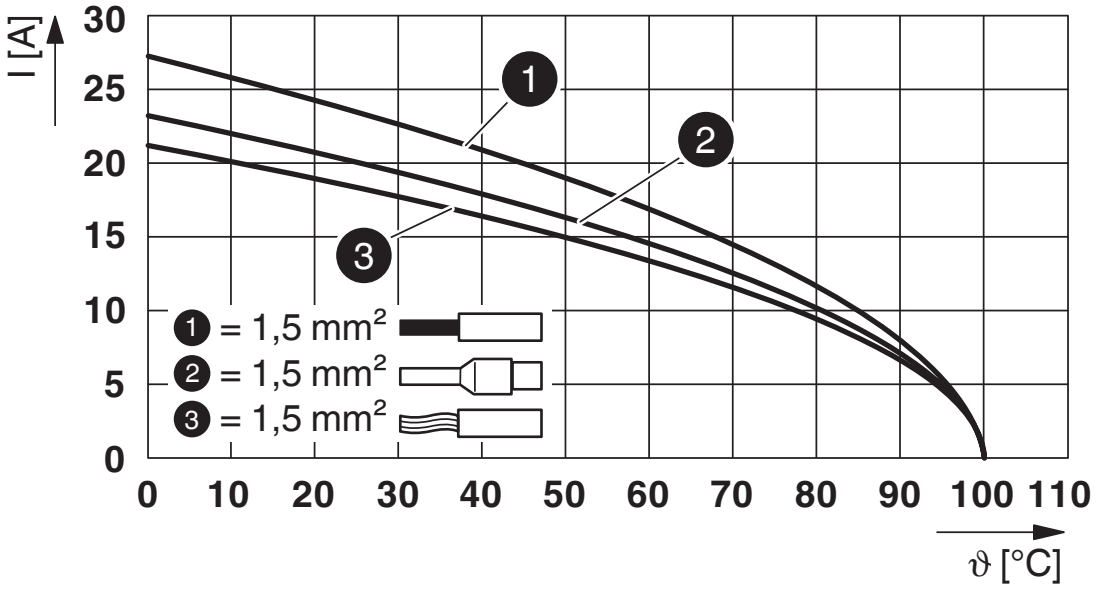


Derating diagram for 1.5 mm$^2$

Diagram

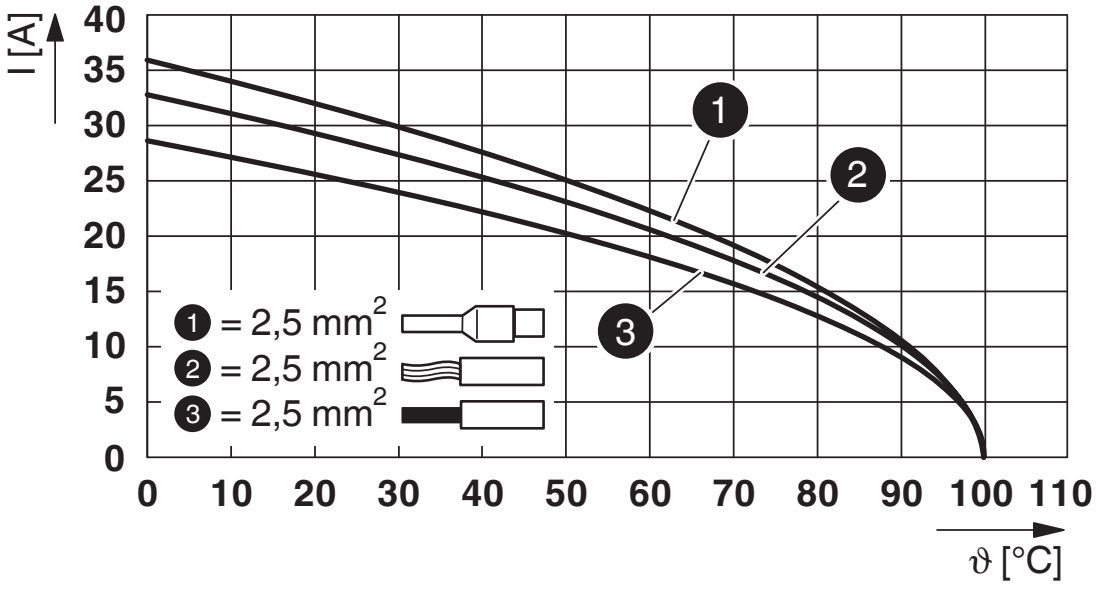


Derating diagram for 2.5 mm$^2$

## Approvals

To download certificates, visit the product detail page: https://www.phoenixcontact.com/us/products/1088687

**VDE Zeichengenehmigung**
Approval ID: 40059408

**cULus Listed**
Approval ID: E468743

| | Nominal voltage $U_N$ | Nominal current $I_N$ | Cross section AWG | Cross section $mm^2$ |
|---|---|---|---|---|
| keine | | | | |
| Only rigid conductors | 600 V | 20 A | - 14 | - |
| multi-stranded with ferrule | 600 V | 20 A | - 14 | - |
| Only flexible conductors | 600 V | 20 A | - 14 | - |

## Classifications

### ECLASS

| | |
|---|---|
| ECLASS-13.0 | 27440602 |
| ECLASS-15.0 | 27440602 |

### ETIM

| | |
|---|---|
| ETIM 10.0 | EC002566 |

### UNSPSC

| | |
|---|---|
| UNSPSC 21.0 | 39121500 |

## Environmental product compliance

EU RoHS

| | |
|---|---|
| Fulfills EU RoHS substance requirements | Yes, No exemptions |

China RoHS

| | |
|---|---|
| Environment friendly use period (EFUP) | EFUP-E |
| | No hazardous substances above the limits |

EU REACH SVHC

| | |
|---|---|
| REACH candidate substance (CAS No.) | No substance above 0.1 wt% |


Phoenix Contact 2026 © - all rights reserved
https://www.phoenixcontact.com



Phoenix Contact USA
586 Fulling Mill Road
Middletown, PA 17057, United States
(+717) 944-1300
info@phoenixcon.com