# PSR-MC43-2SDO-1DO-24DC-SC - Safety relay module

1087561

https://www.phoenixcontact.com/us/products/1087561

Please be informed that the data shown in this PDF document is generated from our online catalog. Please find the complete data in the user documentation. Our general terms of use for downloads are valid.



Safety relay module with IO-Link for emergency stop, safety doors, and light grids, to SIL 3, cat. 4, PL e, 2 sensor circuits, automatic or manual, monitored start, 2 safe digital outputs, 1 signal output, $U_S$ = 24 V DC, pluggable screw terminal block

## Your advantages

- Up to Cat. 4/PL e in accordance with ISO 13849-1, SIL 3 in accordance with EN IEC 62061, SIL 3 in accordance with IEC 61508
- For emergency stop and safety door monitoring, plus evaluation of light grids
- For monitoring 4-wire control strips or safety shut-off mats in accordance with EN ISO 13856-1
- 2 sensor circuits
- 2 safe digital outputs
- 1 digital signal output
- Diagnostic data via IO-Link in combination with PSR-CT safety switches
- 1- and 2-channel control
- Manually monitored and automatic activation

## Commercial data

| | |
|---|---|
| Item number | 1087561 |
| Packing unit | 1 pc |
| Minimum order quantity | 1 pc |
| Product key | DNA181 |
| GTIN | 4055626885803 |
| Weight per piece (including packing) | 164 g |
| Weight per piece (excluding packing) | 132.38 g |
| Country of origin | DE |

## Technical data

### Notes

Note on application

| | |
|---|---|
| Note on application | Only for industrial use |

### Product properties

| | |
|---|---|
| Product type | Safety relays |
| Product family | PSRmini |
| Application | Emergency stop |
| | Safety door |
| | Light grid |
| | Transponder |
| | Switching capacities |
| | Safety shut-off mats |
| Control | 1 and 2 channel |

Insulation characteristics: Air clearances and creepage distances between the power circuits

| | |
|---|---|
| Overvoltage category | II |
| Degree of pollution | 2 |

Times

| | |
|---|---|
| Typical response time | < 200 ms (automatic start) |
| | < 175 ms (manual, monitored start) |
| Typ. starting time with $U_s$ | < 200 ms (when controlled via A1) |
| Response time | < 10 ms |
| Restart time | < 1 s (Boot time) |
| Recovery time | 250 ms (following demand of the safety function) |

### Electrical properties

| | |
|---|---|
| Maximum power dissipation for nominal condition | 4 W ($U_B$ = $U_{BL}$ = 30 V, $I_{L1}$ = $I_{L2}$ = 2.4 A) |
| Nominal operating mode | 100% operating factor |

Air clearances and creepage distances between the power circuits

| | |
|---|---|
| Rated insulation voltage | 63 V |
| Rated surge voltage/insulation | Safe isolation, 0.5 kw between logic and IO-Link |
| | Basic insulation 4 kV between all current paths and housing |

Supply

| | |
|---|---|
| Designation | L+/L- |
| Nominal voltage for I/O supply | 24 V DC -20 % / +25 % (Provided via the IO-Link interface of the IO-Link master.) |
| Current consumption | typ. 8 mA |
| Protective circuit | Serial protection against polarity reversal; Suppressor diode |

Supply

| | |
|---|---|
| Designation | A1/A2 |
| Rated control circuit supply voltage $U_S$ | 19.2 V DC ... 30 V DC |
| Rated control circuit supply voltage $U_S$ | 24 V DC -20 % / +25 % (provide external protection) |
| Rated control supply current $I_S$ | typ. 72 mA |
| Power consumption at $U_S$ | typ. 1.73 W |
| Inrush current | typ. 12 A (Δt < 10 µs) |
| Filter time | 1 ms (For the logic. At A1 in the event of voltage dips at $U_s$ ) |
| Protective circuit | Parallel protection against polarity reversal; Suppressor diode (Provide external fuse protection, see safety notes. Fuse type: 5 AT) |

## Input data

Digital: Sensor circuit S0 (S10, S12, S22)

| | |
|---|---|
| Description of the input | safety-related sensor inputs |
| | IEC 61131-2 type 3 (S10, S12) PNP (S22) |
| Number of inputs | 3 |
| Input voltage range "0" signal | 0 V DC ... 5 V DC (S10, S12) |
| | For S22, see note in “Signal generator connection versions” section. |
| Input voltage range "1" signal | 11 V DC ... 30 V DC (S10, S12) |
| | 0 V (S22) |
| Input current range "0" signal | 0 mA ... 2 mA (S10, S12) |
| Inrush current | < 5 mA (typ. with $U_S$ at S10) |
| | < 5 mA (typ. with $U_S$ at S12) |
| | > -7 mA (typ. with $U_S$ at S22) |
| Filter time | max. 1.5 ms (Test pulse width, low test pulses (S10, S12) ) |
| | Test pulse rate = 5 x Test pulse width |
| | Deactivate the switch-on pulses for safety applications. |
| Concurrence | ∞ |
| Max. permissible overall conductor resistance | 150 Ω |
| Protective circuit | Suppressor diode |
| Current consumption | < 5 mA (typ. with $U_S$ at S10) |
| | < 5 mA (typ. with $U_S$ at S12) |
| | > -7 mA (typ. with $U_S$ at S22) |

Digital: Sensor circuit S1 (S32, S42)

| | |
|---|---|
| Description of the input | safety-related sensor inputs |
| | IEC 61131-2 type 3 |
| Number of inputs | 2 |
| Input voltage range "0" signal | 0 V DC ... 5 V DC |
| Input voltage range "1" signal | 11 V DC ... 30 V DC |
| Input current range "0" signal | 0 mA ... 2 mA |
| Inrush current | < 10 mA (typ. with $U_S$, Δt = 500 µs) |

| | |
|---|---|
| Filter time | max. 1.5 ms (Test pulse width of low test pulses) |
| | Test pulse rate = 5 x Test pulse width |
| | Deactivate the switch-on pulses for safety applications. |
| Concurrence | ∞ |
| Max. permissible overall conductor resistance | 150 Ω |
| Protective circuit | Suppressor diode |
| Current consumption | < 5 mA (typ. with $U_S$) |

Digital: Diagnostic input (DGN)

| | |
|---|---|
| Description of the input | non-safety-related |
| | Potential A1/A2 or $U_S$ |
| Number of inputs | 1 |
| Input voltage range | 0 V DC ... 30 V DC |
| Protective circuit | Suppressor diode |
| Current consumption | typ. 30 mA |

Digital: Start circuit (S34, S35)

| | |
|---|---|
| Number of inputs | 2 |
| Input voltage range "1" signal | 19.2 V DC ... 30 V DC |
| Inrush current | < 10 mA (typ. with $U_S$, Δt = 100 ms) |
| Max. permissible overall conductor resistance | 150 Ω |
| Protective circuit | Suppressor diode |
| Current consumption | < 7 mA (typ. with $U_S$ at S34) |
| | < 5 mA (typ. with $U_S$ at S35) |

IO-Link

| | |
|---|---|
| Designation | IO-Link |
| Transmission speed | 230 kbps (COM3) |
| Cycle Time | 5 ms |
| Process data update | 5 ms |
| Amount of process data | max. 31 Byte (Input data) |
| | max. 16 Byte (Output data) |
| Description of the input | IO-Link switching and communication cable |
| Number of inputs | 1 |
| Connection method | Screw connection |
| Connection technology | 3-conductor |
| Number of ports | 1 |
| Port type | Class A |

## Output data

Digital: 14, 24

| | |
|---|---|
| Output description | Safety-related digital outputs |
| | PNP, IEC 61131-2 Type 2 |
| Number of outputs | 2 |
| Protective circuit | Freewheeling circuit for inductive loads |

| | |
|---|---|
| Short-circuit protection | Yes |
| Output voltage | ≥ 23 V DC ($U_s$ - 1 V) |
| Leakage current | max. 1 mA (in the safe state) |
| Ohmic load | min. 12 Ω |
| Max. capacitive load | max. 10 µF (2.4 A load) |
| | max. 4.7 µF (1 A load) |
| Max. inductive load | max. 1 H |
| Limitation of the voltage induced on circuit interruption | max. 50 V |
| Output current | max. 2.4 A |
| Inrush current | max. 4.8 A (Δt = 10 ms) |
| Min. load current | 2 mA |
| Switching frequency | 1 Hz (Resistive, inductive, capacitive) |
| Output voltage when switched off | < 5 V DC (in the safe state) |
| Discharging circuit | No |

Signal: M1

| | |
|---|---|
| Output description | PNP |
| | non-safety-related |
| Number of outputs | 1 |
| Voltage | approx. 22 V DC ($U_s$ - 2 V) |
| Current | max. 100 mA |
| Maximum inrush current | 500 mA (Δt = 1 ms at $U_s$) |
| Switching frequency | 1 Hz (Resistive, inductive, capacitive) |
| Protective circuit | Suppressor diode |

## Connection data

Connection technology

| | |
|---|---|
| pluggable | yes |

Conductor connection

| | |
|---|---|
| Connection method | Screw connection |
| Conductor cross-section rigid | 0.2 mm² ... 2.5 mm² |
| Conductor cross-section flexible | 0.2 mm² ... 2.5 mm² |
| Conductor cross-section AWG | 24 ... 12 |
| Stripping length | 7 mm |
| Screw thread | M3 |
| Tightening torque | 0.5 Nm ... 0.6 Nm |

## Signaling

| | |
|---|---|
| Status display | 5 x LED (green) |
| Operating voltage display | 1 x LED (green, yellow, red) |

## Dimensions

| | |
|---|---|
| Width | 17.5 mm |
| Height | 112.2 mm |

| | |
|---|---|
| Depth | 114.5 mm |

## Material specifications

| | |
|---|---|
| Color (Housing) | yellow (RAL 1018) |
| Housing material | PBT |

## Characteristics

Safety data

| | |
|---|---|
| Stop category (EN 60204-1) | 0 |

Safety data: EN ISO 13849

| | |
|---|---|
| Performance level (PL) | e |

Safety data: IEC 61508 - High demand

| | |
|---|---|
| Safety Integrity Level (SIL) | 3 |

Safety data: EN IEC 62061

| | |
|---|---|
| Safety Integrity Level (SIL) | 3 |

## Environmental and real-life conditions

Ambient conditions

| | |
|---|---|
| Degree of protection | IP20 |
| Min. degree of protection of inst. location | IP54 |
| Ambient temperature (operation) | -40 °C ... 60 °C (observe derating) |
| Ambient temperature (storage/transport) | -40 °C ... 85 °C |
| Maximum altitude | ≤ 2000 m (Above sea level) |
| Max. permissible humidity (storage/transport) | 75 % (on average, 85% infrequently, non-condensing) |
| Max. permissible relative humidity (operation) | 75 % (on average, 85% infrequently, non-condensing) |
| Shock | 30g |
| Vibration (operation) | 10 Hz ... 150 Hz, 5g |

## Approvals

CE

| | |
|---|---|
| Identification | CE-compliant |

## Standards and regulations

Air clearances and creepage distances between the power circuits

| | |
|---|---|
| Standards/regulations | EN 60947-5-1 |

## Mounting

| | |
|---|---|
| Mounting type | DIN rail mounting |
| Assembly note | See derating curve |
| Mounting position | vertical or horizontal |

## Drawings

Circuit diagram

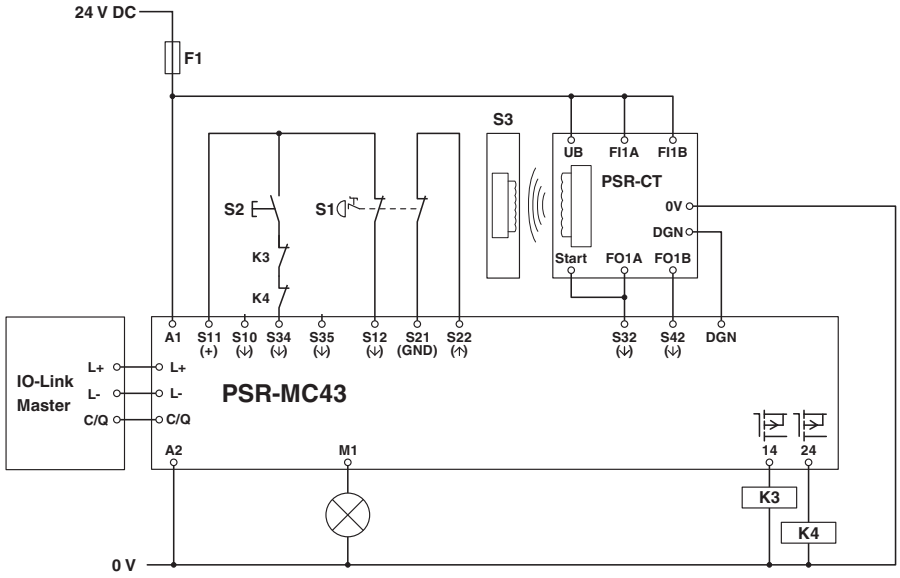


Block diagram

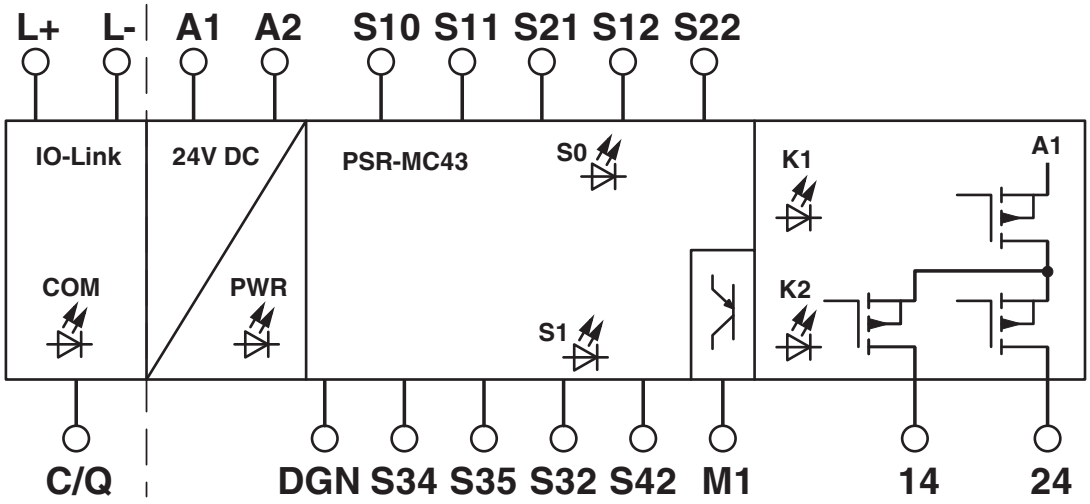


Block diagram

## Classifications

### ECLASS

| | |
|---|---|
| ECLASS-13.0 | 27371819 |

### ETIM

| | |
|---|---|
| ETIM 9.0 | EC001449 |

### UNSPSC

| | |
|---|---|
| UNSPSC 21.0 | 39122200 |

## Environmental product compliance

China RoHS

| | |
|---|---|
| Environment friendly use period (EFUP) | EFUP-50 |
| | An article-related China RoHS declaration table can be found in the download area for the respective article under "Manufacturer declaration". For all articles with EFUP-E, no China RoHS declaration table issued and required. |

EU REACH SVHC

| | |
|---|---|
| REACH candidate substance (CAS No.) | No substance above 0.1 wt% |

Phoenix Contact 2026 © - all rights reserved
https://www.phoenixcontact.com

Phoenix Contact USA
586 Fulling Mill Road
Middletown, PA 17057, United States
(+717) 944-1300
info@phoenixcon.com