PSR-MC45-3NO-1DO-24DC-SP - Safety relays

1082029

https://www.phoenixcontact.com/us/products/1082029

Please be informed that the data shown in this PDF document is generated from our online catalog. Please find the complete data in the user documentation. Our general terms of use for downloads are valid.



Safety relay for emergency stop, safety doors and light grids up to SIL 3, Cat. 4, PL e, 1 or 2-channel operation, automatic or manual, monitored start, 3 enabling current paths, U_S = 24 V DC, pluggable Push-in terminal block

Your advantages

- Up to Cat. 4/PL e in accordance with EN ISO 13849-1, SIL 3 in accordance with EN IEC 62061
- 1- and 2-channel control
- 3 enabling current paths, 1 digital signal output
- Manually monitored and automatic activation in a single device
- Cross-circuit detection

ELEKTROGERÄTE RÜCKNAHME

Commercial data

Item number	1082029
Packing unit	1 pc
Minimum order quantity	1 pc
Product key	DNA181
GTIN	4055626811956
Weight per piece (including packing)	224.7 g
Weight per piece (excluding packing)	180.24 g
Country of origin	DE

Technical data

Notes

Note on application

Note on application	Only for industrial use

Product properties

Product type	Safety relays
Product family	PSRmini
Application	Emergency stop
	Safety door
	Transponder
	Light grid
Control	1 and 2 channel
Relay type	Electromechanical relay with force-guided contacts in accordance with IEC/EN 61810-3

Insulation characteristics

Overvoltage category	II
Degree of pollution	2

Times

Typical response time	< 100 ms (automatic start)
	< 100 ms (manual, monitored start)
Typ. starting time with U_s	< 100 ms (when controlled via A1)
Typical release time	< 20 ms (on demand via the sensor circuit)
	< 20 ms (when controlled via A1; applicative deactivation via A1/A2 is not permitted)
Restart time	< 1 s (Boot time)
Recovery time	500 ms (following demand of the safety function)

Electrical properties

Maximum power dissipation for nominal condition	17.21 W (at U_B = 30 V , I_L^2 = 72 A²)
Nominal operating mode	100% operating factor
Rated insulation voltage	250 V AC
Rated surge voltage/insulation	Basic insulation 4 kV between all current paths
	Basic insulation 4 kV between all current paths and housing

Supply

Designation	A1/A2
Rated control circuit supply voltage U_S	19.2 V DC ... 30 V DC
Rated control circuit supply voltage U_S	24 V DC -20 % / +25 % (provide external protection)
Rated control supply current I_S	typ. 75 mA
Power consumption at U_S	typ. 1.8 W
Inrush current	typ. 2.2 A (Δt = 300 µs at U_s)

Filter time	1 ms (at A1 in the event of voltage dips at U_s)
Protective circuit	Serial protection against polarity reversal
	Suppressor diode 33 V

Input data

Digital: Sensor circuit (S10, S12, S22)

Description of the input	safety-related sensor inputs
	NPN (S10, S12), PNP (S22)
Number of inputs	3
Input voltage range "0" signal	0 V ... 5 V (S10, S12)
Input voltage range "1" signal	19.2 V ... 30 V
Input current range "0" signal	0 mA ... 2 mA (S10, S12)
Inrush current	< 5 mA (typ. with U_S at S10/S12, Δt = 500 µs)
	> -5 mA (typ. with U_S at S22, Δt = 500 µs)
Filter time	max. 3 ms (Test pulse width of low test pulses)
	> 1 s (Test pulse rate for low test pulse)
	Where test pulse width < 1 ms: test pulse rate = 5 x test pulse width
	max. 1 ms (Test pulse width, high test pulse)
	> 100 ms (Test pulse rate, high test pulse)
	Unless test pulses are safety-related, they should be disabled.
Concurrence	∞
Max. permissible overall conductor resistance	150 Ω
Protective circuit	Suppressor diode 38.6 V
Current consumption	< 4 mA (typ. with U_S at S10/S12)
	> -15 mA (typ. with U_S at S22/0 V)

Digital: Start circuit (S34, S35)

Description of the input	non-safety-related
	NPN
Number of inputs	2
Input voltage range "1" signal	19.2 V DC ... 30 V DC
Inrush current	< 10 mA (typ. with U_S, Δt = 500 µs)
Max. permissible overall conductor resistance	150 Ω
Protective circuit	Suppressor diode 38.6 V
Current consumption	2.5 mA (typ. with U_S at S34)
	1 mA (typ. with U_S at S35)

Output data

Relay: Enabling current paths (13/14, 23/24, 33/34)

Output description	2 N/O contacts each in series, safety-related, floating
Number of outputs	3
Contact switching type	3 enabling current paths
Contact material	$AgSnO_2$

Switching voltage	min. 5 V AC/DC
	max. 250 V AC/DC (Observe the load curve)
Switching power	min. 50 mW
Inrush current	min. 10 mA AC/DC
	max. 6 A
Switching capacity	5 A (24 V (DC13))
	5 A (250 V (AC15))
Limiting continuous current	6 A
Sq. Total current	72 A^2 (observe derating)
Switching frequency	0.5 Hz
Mechanical service life	10x 10^6 cycles
Output fuse	6 A gL/gG

Signal: M1

Output description	PNP
	non-safety-related
Number of outputs	1
Voltage	approx. 23 V DC (U_s - 1 V)
Current	max. 100 mA
Maximum inrush current	1 A (Δt = 5 ms at U_s)
Switching frequency	0.5 Hz (ohmic)
Protective circuit	33 V suppressor diode
Short-circuit protection	Yes

Connection data

Connection technology

pluggable	yes

Conductor connection

Connection method	Push-in connection
Conductor cross-section rigid	0.2 mm² ... 1.5 mm²
Conductor cross-section flexible	0.2 mm² ... 1.5 mm²
Conductor cross-section, flexible, with ferrule, with plastic sleeve	0.25 mm² ... 1.5 mm² (only together with CRIMPFOX 6)
Conductor cross-section, flexible, with ferrule, without plastic sleeve	0.25 mm² ... 1.5 mm² (only together with CRIMPFOX 6)
Conductor cross-section AWG	24 ... 16
Stripping length	8 mm

Signaling

Status display	2 x LED (green)
Operating voltage display	1 x LED (green)

Dimensions

Width	22.5 mm
Height	117.4 mm

Depth	114.5 mm

Material specifications

Color (Housing)	yellow (RAL 1018)
Housing material	PA

Characteristics

Safety data

Stop category (EN 60204-1)	0

Safety data: EN ISO 13849

Performance level (PL)	e (5 A DC13; 8760 switching cycles/year or 5 A AC15; 2190 switching cycles/year)

Safety data: IEC 61508 - High demand

Safety Integrity Level (SIL)	3

Safety data: IEC 61508 - Low demand

Safety Integrity Level (SIL)	3

Safety data: EN IEC 62061

Safety Integrity Level (SIL)	3

Environmental and real-life conditions

Ambient conditions

Degree of protection	IP20
Min. degree of protection of inst. location	IP54
Ambient temperature (operation)	-40 °C ... 60 °C (observe derating)
Ambient temperature (storage/transport)	-40 °C ... 85 °C
Maximum altitude	≤ 2000 m (Above sea level)
Max. permissible humidity (storage/transport)	75 % (on average, 85% infrequently, non-condensing)
Max. permissible relative humidity (operation)	75 % (on average, 85% infrequently, non-condensing)
Shock	15g for Δt = 11 ms (continuous shock: 10g for Δt = 16 ms)
Vibration (operation)	10 Hz ... 150 Hz, 2g

Approvals

CE

Identification	CE-compliant

Mounting

Mounting type	DIN rail mounting
Assembly note	See derating curve
Mounting position	vertical or horizontal

Drawings

Circuit diagram

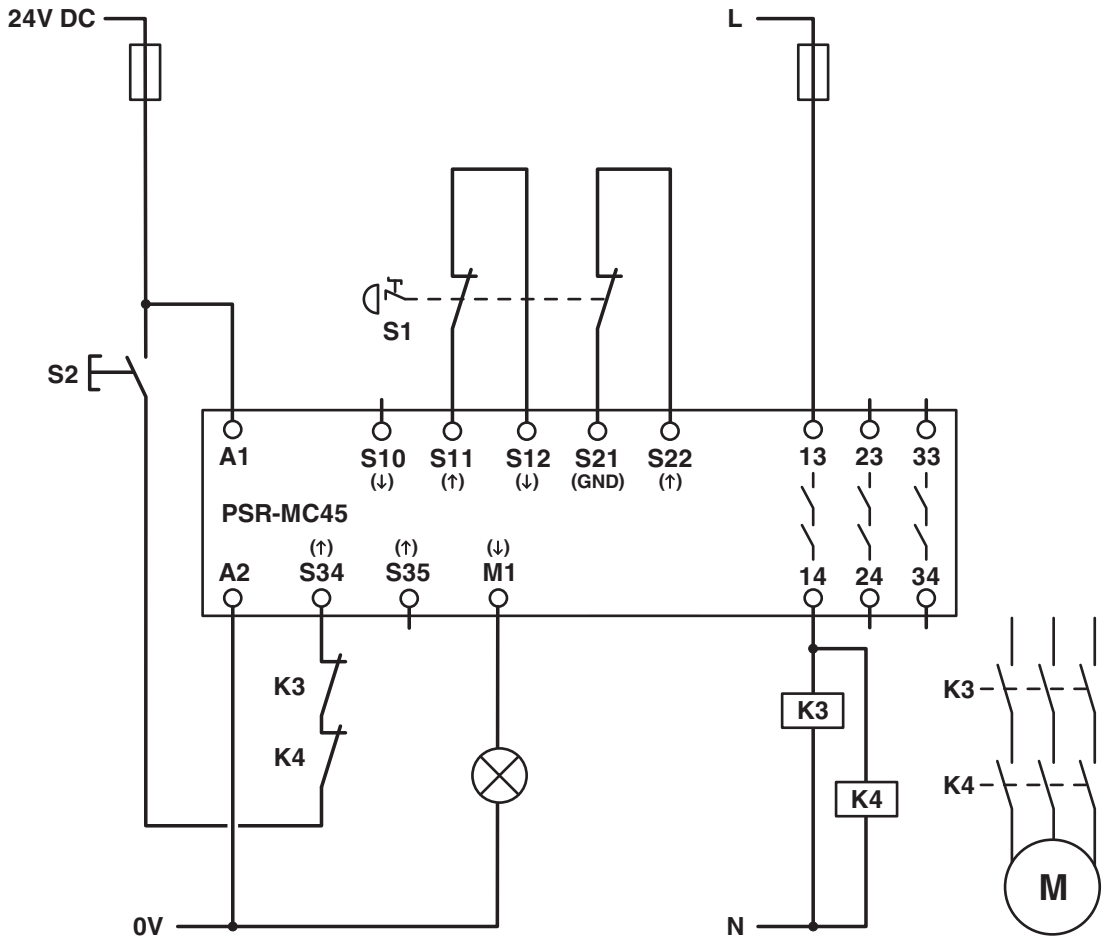

Block diagram

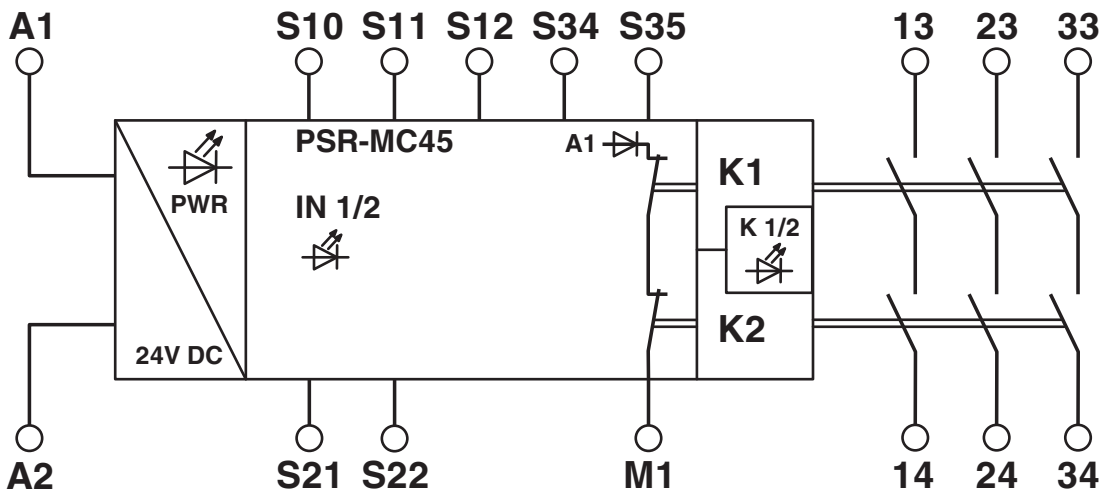

Block diagram

Approvals

To download certificates, visit the product detail page: https://www.phoenixcontact.com/us/products/1082029

Functional Safety
Approval ID: 44 780 15124316

Functional Safety
Approval ID: 44 205 15124316

cULus Listed
Approval ID: E140324

Classifications

ECLASS

ECLASS-13.0	27371819
ECLASS-15.0	27371819
ECLASS-15.0 ASSET	27250101

ETIM

ETIM 10.0	EC001449

UNSPSC

UNSPSC 21.0	39122200

Environmental product compliance

EU RoHS

Fulfills EU RoHS substance requirements	Yes
Exemption	7(a), 7(a)-I, 7(c)-I

China RoHS

Environment friendly use period (EFUP)	EFUP-50
	An article-related China RoHS declaration table can be found in the download area for the respective article under "Manufacturer declaration". For all articles with EFUP-E, no China RoHS declaration table issued and required.

EU REACH SVHC

REACH candidate substance (CAS No.)	Lead(CAS: 7439-92-1)
SCIP	0685bee8-2dff-4e54-b931-1ce03eb289a5

Phoenix Contact 2026 © - all rights reserved
https://www.phoenixcontact.com

Phoenix Contact USA
586 Fulling Mill Road
Middletown, PA 17057, United States
(+717) 944-1300
info@phoenixcon.com